FireStar Plus

64-Bit CPU Single Chip Notebook Solution

Addendum to Preliminary Data Book

(FireStar Preliminary Data Book PN 912-2000-015 Rev. 1.0)

OPTi Confidential

Preliminary

Revision: 1.0
912-4000-013
October 3, 1997

Copyright

Copyright © 1997, OPTi Inc. All rights reserved. No part of this publication may be reproduced, transmitted, transcribed, stored in a retrieval system, or translated into any language or computer language, in any form or by any means, electronic, mechanical, magnetic, optical, chemical, manual, or otherwise, without the prior written permission of OPTi Incorporated, 888 Tasman Drive, Milpitas, CA 95035.

Disclaimer

OPTi Inc. makes no representations or warranties with respect to the design and documentation herein described and especially disclaims any implied warranties of merchantability or fitness for any particular purpose. Further, OPTi Inc. reserves the right to revise the design and associated documentation and to make changes from time to time in the content without obligation of OPTi Inc. to notify any person of such revisions or changes.

Note: Before designing contact OPTi for latest Product Alerts, Applications Notes, and Errata for this product line.

Trademarks

OPTi and OPTi Inc. are registered trademarks of OPTi Inc. All other trademarks and copyrights are the property of their respective holders.

OPTi Inc.
888 Tasman Drive
Milpitas, CA 95035
Tel: (408) 486-8000
Fax: (408) 486-8001
www.opti.com

Table of Contents

1.0 Overview 1

1.1 Features 1

1.1.1 Ultra DMA IDE Interface 1

1.1.2 Synchronous DRAM on All Banks 1

1.1.3 2.5V CPU Interface 1

1.1.4 Redefinition of DRQ/DACK# Interface 1

1.1.5 Warnings 2

1.2 PCICLK0-5 Usable as PIO0-5 3

1.3 Support for 64Mb SDRAM 3

1.4 Dynamic Clock Control Feature 3

1.5 ATA33 Support Signal 4

1.6 Documentation Changes 4

1.7 Improved ACPI Functionality 4

1.8 Generation of SMI# by SERR# 5

1.9 General Upgrade Issues 5

2.0 Signal Definitions 6

3.0 Clock Signal Specifications 10

3.1 CPU Input Clock Recommendations 10

3.2 PCI Input Clock Recommendations 10

4.0 BIOS Recommendations 10

4.1 Basic Configuration 10

4.2 Preliminary Memory Configuration 11

4.3 Setup Options 11

4.3.1 Refresh Mode 11

4.3.2 PCICLK 11

4.3.3 PCI Post Write 11

4.3.4 ISA Retry 12

Table of Contents (cont.)

4.3.5 Buffered DMA 12
4.3.6 L2 Cache Control 12
4.3.7 Cache 3-1-1-1-1-1-1-1 control 12
4.3.8 CAS Precharge 12
4.3.9 DRAM Pipelining 12
4.3.10 DRAM Post Write 13
4.3.11 *CPU Write to DRAM Buffer 13
4.3.12 SDRAM CAS#/Burst Order 13
4.3.13 *DRAM Byte Merge 13
4.3.14 *DRAM Read-Around 13
4.3.15 PCI Master Wait States 13
4.3.16 *PCI Write to DRAM Buffer 13
4.3.17 *EDO Timing: 14

4.4 Refresh Modes 14

4.5 FPM/EDO/SDRAM Detection Algorithm 14

4.6 DRAM Sizing Algorithm 17
4.6.1 DRAM Detection and Sizing Algorithm 17

4.7 SDRAM Sizing Algorithm 20

4.8 Integrated Local Bus Enhanced IDE Interface 21
4.8.1 Bus Mastering IDE Controller 21
4.8.2 Programming the IDE Controller 24
4.8.3 Programming Timing Information 27
4.8.4 Bus Mastering Support Overview 34
4.8.5 Physical Region Descriptor Table 35
4.8.6 UltraDMA Mode Implementation 40
4.8.7 Emulated Bus Mastering Mode 45

5.0 PIR Table for FireStar Plus 47

5.1 Overview 47

5.2 OPTi PCI Interrupt Source Overview 47

5.3 OPTi-Suggested Link Value Scheme 47
5.3.1 Proposed Usage 47
5.3.2 IRQ Selection Source and Register Offset 48

Table of Contents (cont.)

5.3.3 Example of a PCI IRQ routing table: 49

6.0 Interfacing the FireStar Plus Chipset with the 82C602A 51

6.1 Purpose of Using the 82C602A 51

6.2 Connectivity 51

6.2.1 Strapping the 82C602A 51
6.2.2 Using the 82C602A Internal RTC 51
6.2.3 DREQ# and DACK# Connectivity 51
6.2.4 Miscellaneous Power management connectivity 52

Appendix A. 602A Notebook Companion Chip 55

A.1 Overview 55

A.1.1 Mode/Chipset Support 55
A.1.2 RTC/CMOS RAM Register Access 55
A.1.3 Design Notes 55
A.1.4 Reducing Suspend Power Consumption 55
A.1.5 Power Consumption Measurements 56
A.1.6 Internal Real-Time Clock (RTC) 56

A.2 Signal Definitions 65

A.3 Notebook Mode A Signal Descriptions 68

A.3.1 Clock and Reset Interface Signals 68
A.3.2 Interrupt Control Interface Signals 68
A.3.3 ISA DMA Arbiter Interface Signals 68
A.3.4 Data Bus and Control Interface Signals 69
A.3.5 Power Management Interface Signals 69
A.3.6 Real-Time Clock Interface Signals 70
A.3.7 IDE Interface Signals 70
A.3.8 Power and Ground Pins 71

A.4 Schematics 72

A.5 82C602A Mechanical Package Outline 73

Appendix B. Register Descriptions 75

B.1 PCIDV0 Register Space 75

Table of Contents (cont.)

B.2 SYSCFG Register Space 80
B.2.1 System Configuration Register Index/Data Programmable 80
B.3 PCIDV1 Register Space 119

Appendix C. AC Characteristics 145

C.1 CPU Interface Module AC Characteristics (66MHz - Preliminary) 145
C.2 DRAM Controller Module AC Characteristics (66MHz - Preliminary) 146
C.3 PCI Controller Module AC Characteristics (66MHz - Preliminary) 147
C.4 ISA Controller Module AC Characteristics (66MHz - Preliminary) 148

List of Figures

Figure 1-1 Timing Diagram 4
Figure 4-1 Refresh Mode State Diagram 15
Figure 4-2 IDE Interface Using Individual TTL 23
Figure 4-3 IDE Interface Using Zero-TTL 23
Figure 4-4 PIO Mode Configuration 27
Figure 4-5 PIO Mode Cycle Timing 28
Figure 4-6 IDE Interface Primary Channel Programming Flow Chart 31
Figure 4-7 Master IDE Configuration 34
Figure 4-8 Multi-Word DMA Transfer Mode 35
Figure 4-9 Single-Word DMA Transfer Mode 35
Figure 4-10 Physical Region Descriptor Table Entry 36
Figure 4-11 Bus Master IDE Operation 39
Figure 4-12 Ultra DMA Mode 0 Read, Command width = 120 ns 42
Figure 4-13 Ultra DMA mode 0 write 43
Figure 4-14 Ultra DMA Mode 1 Read, Command width = 80ns 43
Figure 4-15 Ultra DMA mode 1 write 44
Figure 4-16 Ultra DMA mode 2 read, Command width = 60ns 44
Figure 4-17 Ultra DMA mode 2 write 45
Figure 5-1 PCI Interrupts Mapping Matrix 50
Figure 6-1 Schematics with 602A 53
Figure A-1 RTCVCC Switching Circuit Example 56
Figure A-2 RTC Address Map 57
Figure A-3 Update-Ended/Periodic Interrupt Relationship 59
Figure A-4 Quartz Crystal Equivalent Circuit 60
Figure A-5 Impedance Graph 60
Figure A-6 RTC Oscillator Circuit Block Diagram 61
Figure A-7 Typical Temperature Characteristics 61
Figure A-8 Frequency Variation Versus Load Capacitance 62
Figure A-9 Notebook Mode A Pin Diagram (100-Pin PQFP) 65
Figure A-10 Notebook Mode A Pin Diagram (100-Pin TQFP) 66
Figure A-11 602A Mode A for FireStar Plus 72
Figure A-12 82C602A 100-Pin Plastic Quad Flat Pack (PQFP) 73
Figure A-13 82C602A 100-Pin Thin Quad Pack (TQFP) 74

List of Figures (cont.)

List of Tables

Table 1-1 DACK# Encoding 1
Table 1-2 New DACK# Utilization 1
Table 2-1 Pin Changes from FireStar ACPI to FireStar Plus 6
Table 2-2 Alphabetical Pin Cross-Reference List 7
Table 4-1 Programming Size Registers 19
Table 4-2 IDE Pin Programming Registers 21
Table 4-3 General IDE Control Line Assignment 23
Table 4-4 Enabling/Disabling Access to IDE I/O Space Registers 24
Table 4-5 IDE Interface Control Registers 25
Table 4-6 IDE Timing Control “Common Timing” 28
Table 4-7 IDE Timing Control “Independent Timing” 29
Table 4-8 Independent Timing Selection Options for Primary Channel 32
Table 4-9 16-Bit Timing Parameters with 33MHz PCI Bus 32
Table 4-10 16-Bit Timing Parameters with 25MHz PCI Bus 33
Table 4-11 Physical Region Descriptor Table Entry 35
Table 4-12 Bus Master IDE Registers 36
Table 4-13 DMA Mode Programming Bits 37
Table 4-14 IDE Interrupt Routing Chart 39
Table 4-15 IDE Interrupt Selection Registers 40
Table 4-16 Emulated Bus Master Control Registers 46
Table 6-1 DACK# Encoding 51
Table 6-2 New DACK# Utilization 51
Table A-1 Mode Strapping Options 55
Table A-2 Typical Current Consumption Figures for RTC Power 56
Table A-3 Typical Current Consumption Figures for Digital Power 56
Table A-4 Time, Alarm, and Calendar Formats 57
Table A-5 Square-Wave Frequency/Periodic Interrupt Rate 58
Table A-6 Crystal Parameters 59
Table A-7 Control/Status Registers Summary 63
Table A-8 Register A 63
Table A-9 Register B 63
Table A-10 Register C 64
Table A-11 Register D 64
Table A-12 Notebook Mode A - Numerical Pin Cross-Reference List 67
Table A-13 Notebook Mode A - Alphabetical Pin Cross-Reference List 67
Table B-1 PCIDV0 00h-FFh 75
Table B-2 SYSCFG Base Select Register 80
Table B-3 SYSCFG 00h-2Fh 80
Table B-4 SYSCFG 30h-FFh (Power Management) 96
Table B-5 PCIDV1 00h-FFh 119

List of Tables (cont.)

64-Bit CPU Single Chip Notebook Solution

1.0 Overview

This section describes the follow-on chip to the OPTi FireStar ACPI solution, the FireStar Plus. The key features of this new product can be summarized as follows.

- Mostly backward-compatible in pin function and register set with FireStar ACPI (some PIO functions have been moved from critical pins to improve timing)
- Implements ATA-33 (Ultra DMA) IDE Interface, with support for all modes
- Supports 2.5V CPUs
- Incorporates MA13 support for 64Mb SDRAM chips
- Incorporates 64Mb EDO DRAM support
- Enables use of synchronous DRAM on all six banks (original FireStar chip limited synchronous DRAM to the first four banks)
- Allows redefinition of many interface pins for better utilization of chipset PIO features (many new function pins are easily available).

1.1 Features

The following paragraphs describe the feature set changes between FireStar ACPI and FireStar Plus.

1.1.1 Ultra DMA IDE Interface

The ATA33 specification for synchronous bus mastering IDE, also known as Ultra DMA, is fully supported by FireStar Plus.

1.1.2 Synchronous DRAM on All Banks

The original FireStar chip supports synchronous DRAM only on RAS0-3#. FireStar Plus also supports synchronous DRAM on RAS4-5#. The additional functionality is selected through register bits that are already defined on the FireStar ACPI part.

1.1.3 2.5V CPU Interface

FireStar Plus supports newer CPUs with I/O voltage requirements as low as 2.5V. The pin redefinition is as follows.

- Pins E8, G5, T5, and W5 are now VCC_CPU and can be powered at 2.5V or 3.3V.
- Pins K5, H22, and AB19 are now VCC_CORE and must always be powered at 3.3V.
- Pin M5, CPUCLKIN, must receive a clock on the VCC_CPU plane. So if a 2.5V CPU is used, this clock should also be 2.5V.

The 2.5V interface is a strap-selected option. It is selected by a strap on pin B7 (new MA13 pin). If B7 is sensed low at reset, the CPU interface is 3.3V; if sensed high along with TMS (pin AB5) low, the CPU interface is 2.5V.

1.1.4 Redefinition of DRQ/DACK# Interface

The 7 pins assigned to DACK0-7# can be redefined to improve availability of PIO pins.

Table 1-1 DACK# Encoding

Original Name	New Signal	Decoder Input	Decoder Output
DACK0# (O)	EDACK0 (O)	A	DACK0-7# correspond to decoder outputs Y0-Y7
DACK1# (O)	EDACK1 (O)	B	
DACK2# (O)	EDACK2 (O)	C	

Table 1-2 New DACK# Utilization

Original Name	New Signal	Mux Input	ATCLK /2 (B)	ATCLK (A)	Muxed Signals	Control PCIDV1
DACK3# (O)	EPMMUX0 (I) or EDACKEN (O)	C0	0	0	RINGI	
		C1	0	1	EPMI2#	
		C2	1	0	EPMI3#	
		C3	1	1	LLOBAT	

Original Name	New Signal	Mux Input	ATCLK /2 (B)	ATCLK (A)	Muxed Signals	Control PCIDV1
DACK5# (O)	EPMMUX1 (I)	C0	0	0	IRQ8# or ACPI8	BDh[4]
		C1	0	1	EPMI0#	
		C2	1	0	EPMI1#	
		C3	1	1	LOBAT	
DACK6# (O)	EPMMUX2 (I)	C0	0	0	DRQ0 or ACPI4	BDh[0]
		C1	0	1	DRQ1 or ACPI5	BDh[1]
		C2	1	0	DRQ2 or ACPI6	BDh[2]
		C3	1	1	DRQ3 or ACPI7	BDh[3]
DACK7# (O)	EPMMUX3 (I)	C0	0	0	PWRBTN#	
		C1	0	1	DRQ5 or ACPI9	BDh[5]
		C2	1	0	DRQ6 or ACPI10	BDh[6]
		C3	1	1	DRQ7 or ACPI11	BDh[7]

While the new definition only involves circuit modifications to the DACK0-7# pins, the overall gain is much greater when used with the 82C602A Companion Chip in its Viper Notebook Mode A configuration.

- 8 power management inputs are now available, muxed in with the DRQs and IRQ8# on the four EPMMUX pins.
- 7 full-featured PIO pins are available on the former FireStar DRQ0-7 pins and IRQ8# pin. The number of pins is actually 8, but is reduced by 1 because one must be programmed as ATCLK/2.
- 12 PPWR outputs are generated by latching the SD bus lines from PCTLH (FireStar PPWRL) and PCTLL (FireStar RSTDRV).
- The ISA bus RSTDRV signal is now generated by the 82C602A chip, so that the FireStar RSTDRV pin can be used for PPWR generation (power control latch control signal). If the extra PPWR signals are not needed, the FireStar RSTDRV pin becomes useful as a full-featured PIO pin.

Note: RINGI, PWRBTN#, and IRQ8# are selected with ATCLK and ATCLK/2 both low. This arrangement allows the chipset to monitor these signals for their wakeup function from resume even if the system is in Suspend mode (with ATCLK and ATCLK/2 both fixed low).

These options are selectable through the registers shown below.

PCIDV1	Name	7	6	5	4	3	2	1	0
BCh	82C602A Extended Mode Register 1	Reserved	Reserved	EDACK-EN# Polarity 0=Active low 1=Active high	Share NOWS# input with DCS3# output 0=No (default) 1=Yes	Share IOCHCK# with SERR# 0=No (default) 1=Yes (input qualified by port 061h bit)	Pin AE18 Function 0=IRQSER 1=DDRQ1 (default)	Extended Mode pin J22 Usage 0=EPM-MUX0 (I) 1=EDACK EN (O)	DACK0-7# Extended Mode (82C602A mode) 0=Disable 1=Enable
BDh	82C602A Extended Mode Register 2	EPMMUX3 C3 Input 0=DRQ7 1=ACPI11	EPMMUX3 C2 Input 0=DRQ6 1=ACPI10	EPMMUX3 C1 Input 0=DRQ5 1=ACPI9	EPMMUX1 C0 Input 0=IRQ8# 1=ACPI8	EPMMUX2 C3 Input 0=DRQ3 1=ACPI7	EPMMUX2 C2 Input 0=DRQ2 1=ACPI6	EPMMUX2 C1 Input 0=DRQ1 1=ACPI5	EPMMUX2 C0 Input 0=DRQ0 1=ACPI4

1.1.5 Warnings

1. Until the Extended Mode option has been programmed, DACK3-7# will be driving out against the signal input muxes. It is therefore important to ensure that the logic will not be harmed by this arrangement

(the FireStar outputs safely accept being driven by external logic in this mode).

2. EDACKEN is an option used to ensure proper ISA master operation. It prevents the EDACK decoder from glitching its DACK# outputs during EDACK switching. If ISA masters are not supported in the system, this option is not needed (tie the EDACK line high on the 82C602A).
3. There are no provisions to block conflicts in case more than one pin is programmed to the same function. For example, if a PIO pin is programmed to be ACPI8-11, and the Extended Mode option also enables EPMMUX1 to bring in ACPI8-11, the results are unpredictable.

1.2 PCICLK0-5 Usable as PIO0-5

The PIO0-5 pin functions have been removed from their original CPU and memory interface pins to enable better timing control on these lines. These PIO functions have been transferred to PCICLK0-5 so that all the output PIO functions are now available on these pins. The following restrictions must be observed in properly utilizing these pins.

- PCICLK0: This pin defaults to its PCICLK output function. Therefore, the connected device must be able to accept a 33MHz clock until the BIOS reprograms the pin. *Be sure to program this pin to an appropriate function/level before entering Suspend*.
- PCICLK1-2/GNT1-2#: If strapped for their GNTx# function, these pins default to a high state. *Suspend state is controlled through PCIDV1 72h[5:4].*
- PCICLK3/CMD#/DIRTY: If strapped for the CMD#/DIRTY function, this pin defaults to a high state. *Suspend state is controlled through PCIDV1 73h[7:6].*
- PCICLK4/ATCLK: If strapped for the ATCLK function, this pin outputs an 8MHz signal which the connected device must be able to accept until the BIOS has had a chance to reprogram the pin. *Be sure to program this pin to an appropriate function/level before entering Suspend.*
- PCICLK5/BALE: If strapped for the BALE function, this pin defaults to a low state. *Be sure to program this pin to an appropriate function/level before entering Suspend.*

Note: The Suspend mode setting of the original PIO0-5 pins, through bit 7 of the respective PIO Function Register, remains with the original pins. Thus:

- PCIDV1 80h[7] controls CDOE# (P100)
- PCIDV1 81h[7] controls TAGWE# (P101)
- PCIDV1 82h[7] controls ADSC# (P102)
- PCIDV1 83h[7] controls ADV# (P103)
- PCIDV1 84h[7] controls RAS2# (P104)
- PCIDV1 85h[7] controls RAS1#. (P105)

1.3 Support for 64Mb SDRAM

The MA13 address line is now provided on B7. Set SYSCFG ACh[5]=1 to enable the MA13 pin. Note that B7 is also available as the DCC pin, and is additionally used as the CPU voltage threshold strap option.

MA13 is switchable between 4 and 16mA along with the other MA lines. It is on the DRAM power plane.

1.4 Dynamic Clock Control Feature

FireStar Plus allows the CPU clock frequency to be changed through a STPCLK# generation sequence. This feature, Dynamic Clock Control (DCC), is available as an alternative to the MA13 pin B7.

Because this pin is used as a strap option at reset time, the default state of the bit is always the same as the strap-selected option. Therefore, the system logic must be designed with this in mind.

SYSCFG	Name	7	6	5	4	3	2	1	0
ACh	Dynamic Clock Control Register	Reserved	Reserved	B7 Pin Function Select 0=DCCEN (default) 1=MA13	Block other STPCLK# sources when DCCEN active 0=No 1=Yes	Current state of DCCEN pin 0=Low 1=High	STPCLK# Deassertion Delay from DCCEN state change 00=0.5-0.7ms 01=1.0-1.3ms 10=1.7-2.0ms 11=1.00-1.25s		Activate/ de-activate frequency change 0=No effect 1=Toggle DCCEN

The timing for this feature is shown in Figure 1-1.

Figure 1-1 Timing Diagram

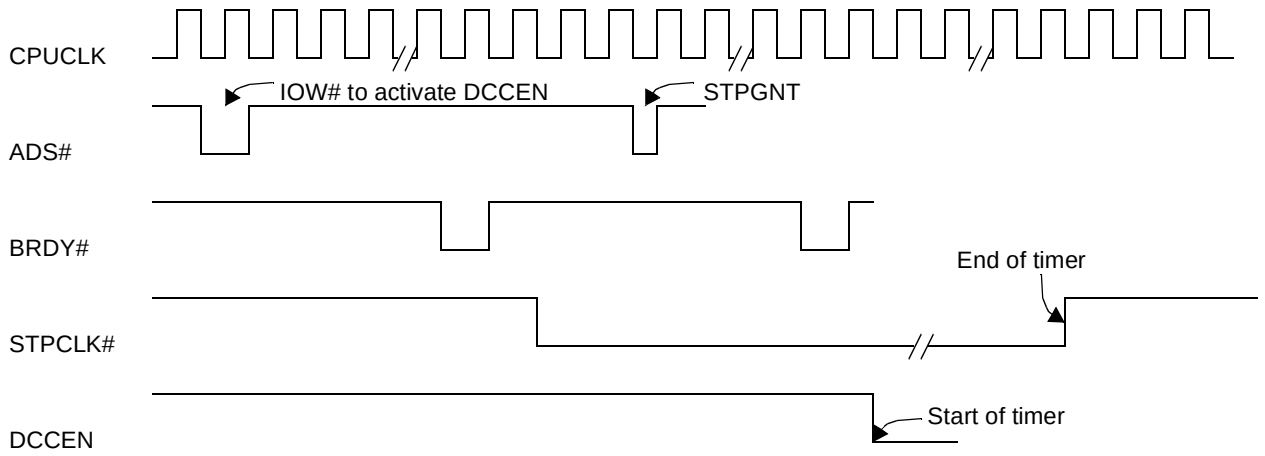

1.5 ATA33 Support Signal

Current FireStar designs use the DRD# signals from the IDE controller to reverse the direction of the data buffer on read cycles. But FireStar Plus designs that take advantage of ATA33 will need an extra signal, IDEDIR, to control the direction of the buffer, since the read signal toggles during ATA33 transfers.

In FireStar Plus, the IDEDIR signal is superimposed on the ISA signal TC. This arrangement causes no conflict, since ISA cycles and IDE cycles are always exclusive of each other. The TC toggling does not have any effect on the IDE interface unless the DBE# signal for the specific drive buffer is active.

The IDEDIR signal is put on TC only during IDE cycles, so that the idle state of TC remains LOW at all other times. The register setting used to enable this functionality works as follows.

PCIDV1 52h[7] = 0; TC pin is TC
PCIDV1 52h[7] = 1; TC pin is TC/IDEDIR

1.6 Documentation Changes

1. The following bit was present in all previous FireStar production revisions but never documented.

   PCIDV1 53h[0] = 0; All inputs (PCI requests) are not synchronized

   PCIDV1 53h[0] = 1; Synchronize all inputs to PCICLK before passing to arbiter.

2. The default strapping for pin N24 and R23 described in the FireStar ACPI Data Book is incorrect. The correct default is RTCAS pulled *up*, A20M# pulled *down*.

1.7 Improved ACPI Functionality

SCI Interrupt. An SCI can now generate any interrupt from the group IRQ9,10,11,13. Selection bits for this function are shown below.

PCIDV1	Name	7	6	5	4	3	2	1	0
EFh	ACPI Misc. Control Register	Reserved	Reserved	Reserved	Reserved	Reserved	Select IRQ13 as level mode 0=No 1=Yes	System IRQ used for SCI 00=IRQ9 (default) 01=IRQ10 10=IRQ11 11=IRQ13	

ACPI Input Polarity. ACPI inputs now have individually selectable polarity. The "active" polarity is the one that causes an SCI. The new registers shown below select the polarity of each ACPI input, regardless of the source (IRQ driveback, discrete PIO pin input, multiplexed PIO pin input, or multiplexed Extended Mode input).

The defaults listed guarantee backward compatibility with the fixed settings of the previous FireStar ACPI revision.

PCIDV1	Name	7	6	5	4	3	2	1	0
DEh	ACPI Input Polarity Register byte 0	ACPI7 LID Event active when: 0=Low 1=High (default)	ACPI6 EC# Event active when: 0=Low (default) 1=High	ACPI5 USB# Event active when: 0=Low (default) 1=High	ACPI4 RI# Event active when: 0=Low (default) 1=High	ACPI3 FRI# Event active when: 0=Low (default) 1=High	ACPI2 STSCHG# Event active when: 0=Low (default) 1=High	ACPI1 DOCK# Event active when: 0=Low (default) 1=High	ACPI0 UNDOCK # Request active when: 0=Low (default) 1=High
DFh	ACPI Input Polarity Register byte 1	Reserved	Reserved	Reserved	Reserved	ACPI11 Event active when: 0=Low 1=High (default)	ACPI10 Event active when: 0=Low 1=High (default)	ACPI9 Event active when: 0=Low 1=High (default)	ACPI8 Event active when: 0=Low 1=High (default)

1.8 Generation of SMI# by SERR#

FireStar Plus provides a practical means for SMM code to try to correct PCI errors signalled through SERR#. This feature allows SERR# going active to be handled as a Hot Docking Timeout event, PMI#34. In this way, it is possible to allow the system NMI handler to take care of the SERR# event in the normal way. If there is no NMI handler code present, SMM can step in and resolve the problem.

The feature is enabled as follows.

- Set PCIDV1 68h[7:6]=11 to route SERR# to SMI instead of NMI. When this selection is used, the HDI PIO pin option must not be used.
- Set SYSCFG EFh=08h to enable PMI#34. Note that the SYSCFG EFh timer functions of the HDI feature are not used in this application.

SERR# will now generate a PMI#34 event. The event is indicated in (and cleared by writing to) SYSCFG EAh[5].

This feature is particularly useful in conjunction with the 82C814 Docking Controller. If the 82C814 cannot complete a cycle to its secondary, it will retry its primary bus forever or until reset. But it can be programmed to generate SERR# after a certain number of retries. Converting SERR# to an SMI gives SMM code a chance to clear the 814 secondary and possibly fix the problem.

PCIDV1	Name	7	6	5	4	3	2	1	0
68h	PCICLK Control Register 1	Source of PMI#34 0=HDI 1=SERR#	SERR# generates: 0=NMI 1=SMI valid only if bit 7=1						

1.9 General Upgrade Issues

The following issues may affect FireStar Plus designs. Careful planning will minimize the design impact.

- The PIO0-5 pin functions have been moved from their original pin locations. Most designers could not access these PIO functions since they needed the default pin functionality. Designers should check their circuits for use of these PIO functions (now available on other pins).
- RAS5# is multiplexed with GWE#, which is on the CPU power plane. If a 2.5V CPU is used, the 2.5V RAS5# signal may not be appropriate for the DRAM that is used.
- The drive capability of the GWE# I/O cell is 4mA. If this pin is used as RAS5#, it is not possible to support more than 4 loads on this bank. Designers should only use x16 devices on this bank.
- The new SDCKE signal on A7 has been moved to the FS_CORE power plane which is always 3.3V (SDRAMs can only be 3.3V devices). The drive capability on SDCKE has been increased to 16mA.
- CACS#/DIRTY when used as DIRTY is now 3.3V-tolerant instead of 5V-tolerant.

2.0 Signal Definitions

Table 2-1 Pin Changes from FireStar ACPI to FireStar Plus

Pin #	FireStar ACPI	FireStar Plus	Comments
P1	CDOE#+PIO0	CDOE#	PIO0 moved to Pin AB14
P3	CACS#+DIRTY	CACS#+DIRTY	On the FireStar Plus this pin is not 5V tolerant
E9	TAG0+CAS0#	TAG0	
D9	TAG1+CAS1#+START#	TAG1	
C9	TAG2+CAS2#+START#	TAG2	
B9	TAG3+CAS3#+SBOFF#	TAG3	
A9	TAG4+CAS4#+SDCKE	TAG4	
D8	TAG5+CAS5#+DWE#	TAG5	
C8	TAG6+CAS6#+SDCAS#	TAG6	
B8	TAG7+CAS7#+SDRAS#	TAG7	
A10	TAGWE#+PIO1	TAGWE#	PIO1 moved to Pin AB17
P5	ADSC#+PIO2	ADSC#	PIO2 moved to Pin AB15
P2	ADV#+PIO3	ADV#	PIO3 moved to Pin AB20
E13	RAS1#+SDCS1#+PIO5	RAS1#+SDCS1#	PIO5 moved to Pin W22
B12	RAS2#+SDCS2#+PIO4	RAS2#+SDCS2#	PIO4 moved to Pin AA22
E22	RAS4#+MA12	RAS4#+SDCS4#+MA12	This version of FireStar supports 6 banks of SDRAM
N1	GWE#+RAS5#	GWE#+RAS5#SDCS5#	
AB14	PCICLK0	PCICLK0+PIO0	
AB17	GNT1#+PCICLK1	GNT1#+PCICLK1+PIO1	
AB15	GNT2#+PCICLK2	GNT2#+PCICLK2+PIO2	
K22	DACK0#/DACKA#+PPWR4	DACK0#+PPWR4+EDACK0	
K23	DACK1#/DACKB#+PPWR5	DACK1#+PPWR5+EDACK1	
K24	DACK2#/DACKC#+PPWR6	DACK2#+PPWR6+EDACK2	
K25	DACK3#/DACKD#+PPWR7	DACK3#+PPWR7+EDACKEN+ EPMMUX0	
K26	DACK5#/DACKE#+PPWR13	DACK5#+PPWR13+EPMMUX1	
J22	DACK6#/DACKF#+PPWR14	DACK6#+PPWR14+EPMMUX2	
J23	DACK7#/DACKG#+PPWR15	DACK7#+PPWR15+EPMMUX3	
AC25	RSTDRV+PIO15	RSTDRV+PIO15+PCTLL	
AB20	CMD#+DIRTY+PCICLK3	CMD#+DIRTY+PCICLK3+PIO3	
AA22	ATCLK+PCICLK4	ATCLK+PCICLK4+PIO4	
W22	BALE+PCICLK5	BALE+PCICLK5+PIO5	
M23	TC+PPWR10	TC+PPWR10+IDEDIR	

Pin #	FireStar ACPI	FireStar Plus	Comments
AC23	PPWRL+PPWR0#	PPWRL+PPWR0#+PCTLH	
B7	Reserved	MA13+DCCEN	
E8, G5, T5, W5	VCC_CORE	VCC_CPU	

Table 2-2 Alphabetical Pin Cross-Reference List

Signal Name	Pin No.	Pin Type	Pwr Plane
A20M#	R3	O	CPU
AD0	AD14	I/O	PCI
AD1	AC14	I/O	PCI
AD2	AF13	I/O	PCI
AD3	AE13	I/O	PCI
AD4	AD13	I/O	PCI
AD5	AC13	I/O	PCI
AD6	AF12	I/O	PCI
AD7	AE12	I/O	PCI
AD8	AD12	I/O	PCI
AD9	AC12	I/O	PCI
AD10	AF11	I/O	PCI
AD11	AE11	I/O	PCI
AD12	AD11	I/O	PCI
AD13	AC11	I/O	PCI
AD14	AF10	I/O	PCI
AD15	AE10	I/O	PCI
AD16	AD10	I/O	PCI
AD17	AC10	I/O	PCI
AD18	AF9	I/O	PCI
AD19	AE9	I/O	PCI
AD20	AD9	I/O	PCI
AD21	AC9	I/O	PCI
AD22	AF8	I/O	PCI
AD23	AE8	I/O	PCI
AD24	AD8	I/O	PCI
AD25	AC8	I/O	PCI
AD26	AB8	I/O	PCI
AD27	AF7	I/O	PCI
AD28	AE7	I/O	PCI
AD29	AD7	I/O	PCI
AD30	AC7	I/O	PCI
AD31	AF6	I/O	PCI
ADS#	V5	I	CPU
ADSC#	P5	O	CPU
ADV#	P2	O	CPU
AEN+PPWR11	M22	I/O	ISA
AHOLD	U3	O	CPU
ATCLK+PCICLK4+PIO4	AA22	O	ISA
BALE+PCICLK5+PIO5	W22	O	ISA
BE0#	W1	I	CPU
BE1#	W2	I	CPU
BE2#	W3	I	CPU
BE3#	W4	I	CPU
BE4#	V1	I	CPU
BE5#	V2	I	CPU

Signal Name	Pin No.	Pin Type	Pwr Plane
BE6#	V3	I	CPU
BE7#	V4	I	CPU
BOFF#	R5	I/O	CPU
BRDY#	U5	O	CPU
BWE#	P4	O	CPU
CACHE#	T2	I	CPU
CACS#+DIRTY	P3	I/O	CPU
CAS0#+SDDQM0#	B10	O	DRAM
CAS1#+SDDQM1#	C10	O	DRAM
CAS2#+SDDQM2#	D10	O	DRAM
CAS3#+SDDQM3#	A11	O	DRAM
CAS4#+SDDQM4#	B11	O	DRAM
CAS5#+SDDQM5#	C11	O	DRAM
CAS6#+SDDQM6#	D11	O	DRAM
CAS7#+SDDQM7#	A12	O	DRAM
C/BE0#	AD15	I/O	PCI
C/BE1#	AC15	I/O	PCI
C/BE2#	AF14	I/O	PCI
C/BE3#	AE14	I/O	PCI
CDOE#	P1	O	CPU
CLKRUN#+PIO6	AF16	I/O	PCI
CMD#+DIRTY+PCICLK3+PIO3	AB20	I/O	ISA
CPAR	AC17	I/O	PCI
CPUCLKIN	M5	I	CPU
CPUINIT	AD6	O	CPU
CPURST	R1	O	CPU
D/C#	T3	I	CPU
DACK0#/DACKA#+PPWR4+EDACK0	K22	O	ISA
DACK1#/DACKB#+PPWR5+EDACK1	K23	O	ISA
DACK2#/DACKC#+PPWR6+EDACK2	K24	O	ISA
DACK3#/DACKD#+PPWR7+EDACKEN+EPMMUX0	K25	I/O	ISA
DACK5#/DACKE#+PPWR13+EPMMUX1	K26	I/O	ISA
DACK6#/DACKF#+PPWR14+EPMMUX2	J22	I/O	ISA
DACK7#/DACKG#+PPWR15+EPMMUX3	J23	I/O	ISA
DBEW#+IDE1_DACK#+DWR#	H24	O	ISA
DDRQ0+PIO9	H25	I/O	ISA
DEVSEL#	AF15	I/O	PCI
DRQ0/DRQA+PIO25	M24	I/O	ISA
DRQ1/DRQB+PIO26	M25	I/O	ISA

Signal Name	Pin No.	Pin Type	Pwr Plane
DRQ2/DRQC+PIO27	M26	I/O	ISA
DRQ3/DRQD+PIO28	L23	I/O	ISA
DRQ5/DRQE+PIO29	L24	I/O	ISA
DRQ6/DRQF+PIO30	L25	I/O	ISA
DRQ7/DRQG+PIO31	L26	I/O	ISA
DWE#+SDWE#	E10	O	DRAM
EADS#+WB/WT#	T4	O	CPU
FERR#	T1	I	CPU
FRAME#	AB9	I/O	PCI
GND	AA6	G	
GND	AA13	G	
GND	AA14	G	
GND	AA21	G	
GND	AB13	G	
GND	E14	G	
GND	F6	G	
GND	F13	G	
GND	F14	G	
GND	F21	G	
GND	N5	G	
GND	N6	G	
GND	N21	G	
GND	P6	G	
GND	P21	G	
GND	P22	G	
GNT0#	AD16	O	PCI
GNT1#+PCICLK1+PIO1	AB17	O	PCI
GNT2#+PCICLK2+PIO2	AB15	O	PCI
GNT3#	AC18	O	PCI
GWE#+RAS5#+SDSC5#	N1	O	CPU
HA3	Y4	I/O	CPU
HA4	Y3	I/O	CPU
HA5	Y2	I/O	CPU
HA6	Y1	I/O	CPU
HA7	AA4	I/O	CPU
HA8	AA3	I/O	CPU
HA9	AA2	I/O	CPU
HA10	AA1	I/O	CPU
HA11	AB4	I/O	CPU
HA12	AB3	I/O	CPU
HA13	AB2	I/O	CPU
HA14	AB1	I/O	CPU
HA15	AC3	I/O	CPU
HA16	AC2	I/O	CPU
HA17	AC1	I/O	CPU
HA18	AD2	I/O	CPU

Signal Name	Pin No.	Pin Type	Pwr Plane
HA19	AD1	I/O	CPU
HA20	AE1	I/O	CPU
HA21	AF1	I/O	CPU
HA22	AE2	I/O	CPU
HA23	AF2	I/O	CPU
HA24	AD3	I/O	CPU
HA25	AE3	I/O	CPU
HA26	AF3	I/O	CPU
HA27	AC4	I/O	CPU
HA28	AD4	I/O	CPU
HA29	AE4	I/O	CPU
HA30	AF4	I/O	CPU
HA31	AC5	I/O	CPU
HD0	N2	I/O	CPU
HD1	N3	I/O	CPU
HD2	N4	I/O	CPU
HD3	M1	I/O	CPU
HD4	M2	I/O	CPU
HD5	M3	I/O	CPU
HD6	M4	I/O	CPU
HD7	L1	I/O	CPU
HD8	L2	I/O	CPU
HD9	L3	I/O	CPU
HD10	L4	I/O	CPU
HD11	L5	I/O	CPU
HD12	K1	I/O	CPU
HD13	K2	I/O	CPU
HD14	K3	I/O	CPU
HD15	K4	I/O	CPU
HD16	J1	I/O	CPU
HD17	J2	I/O	CPU
HD18	J3	I/O	CPU
HD19	J4	I/O	CPU
HD20	J5	I/O	CPU
HD21	H1	I/O	CPU
HD22	H2	I/O	CPU
HD23	H3	I/O	CPU
HD24	H4	I/O	CPU
HD25	H5	I/O	CPU
HD26	G1	I/O	CPU
HD27	G2	I/O	CPU
HD28	G3	I/O	CPU
HD29	G4	I/O	CPU
HD30	F1	I/O	CPU
HD31	F2	I/O	CPU
HD32	F3	I/O	CPU
HD33	F4	I/O	CPU
HD34	F5	I/O	CPU
HD35	E1	I/O	CPU
HD36	E2	I/O	CPU
HD37	E3	I/O	CPU
HD38	E4	I/O	CPU
HD39	D1	I/O	CPU
HD40	D2	I/O	CPU
HD41	D3	I/O	CPU
HD42	D4	I/O	CPU
HD43	C1	I/O	CPU

Signal Name	Pin No.	Pin Type	Pwr Plane
HD44	C2	I/O	CPU
HD45	C3	I/O	CPU
HD46	B1	I/O	CPU
HD47	B2	I/O	CPU
HD48	A1	I/O	CPU
HD49	A2	I/O	CPU
HD50	A3	I/O	CPU
HD51	B3	I/O	CPU
HD52	A4	I/O	CPU
HD53	B4	I/O	CPU
HD54	C4	I/O	CPU
HD55	A5	I/O	CPU
HD56	B5	I/O	CPU
HD57	C5	I/O	CPU
HD58	D5	I/O	CPU
HD59	A6	I/O	CPU
HD60	B6	I/O	CPU
HD61	C6	I/O	CPU
HD62	D6	I/O	CPU
HD63	E6	I/O	CPU
HITM#	R4	I	CPU
IGERR#	AC6	I/O	CPU
INTR	AF5	O	CPU
IO16#+PIO18	W23	I/O	ISA
IOCHRDY	AB26	I/O	ISA
IOR#+IDE1_DRD#	AB24	I/O	ISA
IOW#+IDE1_DWR#	AB25	I/O	ISA
IRDY#	AB11	I/O	PCI
IRQ1+PIO10	AF18	I/O	PCI
IRQ3/IRQA	AC19	I	PCI
IRQ4/IRQB	AD19	I	PCI
IRQ5/IRQC	AE19	I	PCI
IRQ6/IRQD	AF19	I	PCI
IRQ7/IRQE	AD20	I	ISA
IRQ8#+PIO11	AE20	I/O	ISA
IRQ9/IRQF	AF20	I	ISA
IRQ10/IRQG	AB22	I	ISA
IRQ11/IRQH	AC21	I	ISA
IRQ12+PIO12	AD21	I/O	ISA
IRQ14+PIO13	AE21	I/O	ISA
IRQ15+SIN#	AF21	I	ISA
IRQSER+SDCKE+SOUT#	AE18	I/O	PCI
KBDCS#+PIO24+DRD#	J26	I/O	ISA
KEN#	R2	O	CPU
LOCK#	U2	I	CPU
M/IO#	Y5	I	CPU
M16#+PIO19	W24	I/O	ISA
MA0	D12	O	DRAM
MA1	A13	O	DRAM
MA2	B13	O	DRAM
MA3	C13	O	DRAM
MA4	D13	O	DRAM
MA5	A14	O	DRAM
MA6	B14	O	DRAM
MA7	C14	O	DRAM
MA8	D14	O	DRAM
MA9	A15	O	DRAM

Signal Name	Pin No.	Pin Type	Pwr Plane
MA10	B15	O	DRAM
MA11	C15	O	DRAM
MD0	G22	I/O	DRAM
MD1	G23	I/O	DRAM
MD2	G24	I/O	DRAM
MD3	G25	I/O	DRAM
MD4	G26	I/O	DRAM
MD5	F22	I/O	DRAM
MD6	F23	I/O	DRAM
MD7	F24	I/O	DRAM
MD8	F25	I/O	DRAM
MD9	F26	I/O	DRAM
MD10	E23	I/O	DRAM
MD11	E24	I/O	DRAM
MD12	E25	I/O	DRAM
MD13	E26	I/O	DRAM
MD14	D24	I/O	DRAM
MD15	D25	I/O	DRAM
MD16	D26	I/O	DRAM
MD17	C25	I/O	DRAM
MD18	C26	I/O	DRAM
MD19	B26	I/O	DRAM
MD20	A26	I/O	DRAM
MD21	B25	I/O	DRAM
MD22	A25	I/O	DRAM
MD23	C24	I/O	DRAM
MD24	B24	I/O	DRAM
MD25	A24	I/O	DRAM
MD26	D23	I/O	DRAM
MD27	C23	I/O	DRAM
MD28	B23	I/O	DRAM
MD29	A23	I/O	DRAM
MD30	D22	I/O	DRAM
MD31	C22	I/O	DRAM
MD32	B22	I/O	DRAM
MD33	A22	I/O	DRAM
MD34	E21	I/O	DRAM
MD35	D21	I/O	DRAM
MD36	C21	I/O	DRAM
MD37	B21	I/O	DRAM
MD38	A21	I/O	DRAM
MD39	D20	I/O	DRAM
MD40	C20	I/O	DRAM
MD41	B20	I/O	DRAM
MD42	A20	I/O	DRAM
MD43	E19	I/O	DRAM
MD44	D19	I/O	DRAM
MD45	C19	I/O	DRAM
MD46	B19	I/O	DRAM
MD47	A19	I/O	DRAM
MD48	E18	I/O	DRAM
MD49	D18	I/O	DRAM
MD50	C18	I/O	DRAM
MD51	B18	I/O	DRAM
MD52	A18	I/O	DRAM
MD53	D17	I/O	DRAM
MD54	C17	I/O	DRAM

Signal Name	Pin No.	Pin Type	Pwr Plane
MD55	B17	I/O	DRAM
MD56	A17	I/O	DRAM
MD57	E16	I/O	DRAM
MD58	D16	I/O	DRAM
MD59	C16	I/O	DRAM
MD60	B16	I/O	DRAM
MD61	A16	I/O	DRAM
MD62	E15	I/O	DRAM
MD63	D15	I/O	DRAM
MRD#+IDE1_DCS3#	AC26	I/O	ISA
MWR#+IDE1_DCS1#	AB23	I/O	ISA
NA#	U4	O	CPU
NMI	AD5	O	CPU
OSC_14MHZ	E5	I	CORE
OSC32	C7	I	CORE
PCICLK0+PIO0	AB14	I/O	PCI
PCICLKIN	AB6	I	CORE
PERR#	AE17	I/O	PCI
PLOCK#	AE15	I/O	PCI
PPWRL+PPWR0#+PCTLH	AC23	O	ISA
PWRGD	H26	I	ISA
RAS0#+SDCS0#	E12	O	DRAM
RAS1#+SDCS1#	E13	O	DRAM
RAS2#+SDCS2#	B12	O	DRAM
RAS3#+SDCS3#+MA12	C12	O	DRAM
RAS4#+SDCS4#+MA12	E22	O	DRAM
RFSH#+PPWR12	J25	I/O	ISA
REQ0#	AF17	I	PCI
REQ1#+PIO7	AB18	I/O	PCI
REQ2#+PIO8	AE16	I/O	PCI
REQ3#	AD18	I	PCI
RESET#	AC24	O	ISA
ROMCS#+PIO23+ ROMCS#/KBDCS#	J24	I/O	ISA
RSTDRV+PIO15+PCTLL	AC25	I/O	ISA
RTCAS+IDE1_DA0	N24	I/O	ISA
RTCRD#+IDE1_DA1	N25	I/O	ISA
RTCWR#+IDE1_DA2	N26	I/O	ISA
SA0+IDE1_DD0	N23	I/O	ISA
SA1+IDE1_DD1	N22	I/O	ISA
SA2+IDE1_DD2	P26	I/O	ISA
SA3+IDE1_DD3	P25	I/O	ISA
SA4+IDE1_DD4	P24	I/O	ISA
SA5+IDE1_DD5	P23	I/O	ISA
SA6+IDE1_DD6	R26	I/O	ISA
SA7+IDE1_DD7	R25	I/O	ISA
SA8+IDE1_DD8	R24	I/O	ISA
SA9+IDE1_DD9	R23	I/O	ISA
SA10+IDE1_DD10	R22	I/O	ISA
SA11+IDE1_DD11	T26	I/O	ISA
SA12+IDE1_DD12	T25	I/O	ISA
SA13+IDE1_DD13	T24	I/O	ISA
SA14+IDE1_DD14	T23	I/O	ISA
SA15+IDE1_DD15	T22	I/O	ISA
SA16+PIO16	U26	I/O	ISA
SA17+PIO17	U25	I/O	ISA
SA18+PPWR8	U24	I/O	ISA

Signal Name	Pin No.	Pin Type	Pwr Plane
SA19+PPWR9	U23	I/O	ISA
SA20+PPWR0	V26	I/O	ISA
SA21+PPWR1	V25	I/O	ISA
SA22+PPWR2	V24	I/O	ISA
SA23+PPWR3	V23	I/O	ISA
SBHE#+PIO20	W25	I/O	ISA
SD0+MAD0	AD26	I/O	ISA
SD1+MAD1	AD25	I/O	ISA
SD2+MAD2	AD24	I/O	ISA
SD3+MAD3	AE26	I/O	ISA
SD4+MAD4	AE25	I/O	ISA
SD5+MAD5	AF26	I/O	ISA
SD6+MAD6	AF25	I/O	ISA
SD7+MAD7	AF24	I/O	ISA
SD8+MAD8	AE24	I/O	ISA
SD9+MAD9	AF23	I/O	ISA
SD10+MAD10	AE23	I/O	ISA
SD11+MAD11	AD23	I/O	ISA
SD12+MAD12	AF22	I/O	ISA
SD13+MAD13	AE22	I/O	ISA
SD14+MAD14	AD22	I/O	ISA
SD15+MAD15	AC22	I/O	ISA
SDCAS#	A8	O	DRAM
SDRAS#	D7	O	DRAM
SEL#/ATB#+SDCKE+ PIO14	AC20	I/O	ISA
SERR#	AD17	I/O	PCI
SMI#	AE5	O	CPU
SMIACT#	U1	I	CPU
SMRD#+PIO21	W26	I/O	ISA
SMWR#+PIO22	V22	I/O	ISA
SPKOUT	H23	I/O	ISA
STOP#	AC16	I/O	PCI
STPCLK#	AE6	O	CPU
TAG0	E9	I/O	DRAM
TAG1	D9	I/O	DRAM
TAG2	C9	I/O	DRAM
TAG3	B9	I/O	DRAM
TAG4	A9	I/O	DRAM
TAG5	D8	I/O	DRAM
TAG6	C8	I/O	DRAM
TAG7	B8	I/O	DRAM
TAGWE#	A10	O	DRAM
TC+PPWR10+IDEDIR	M23	I/O	ISA
MA13+DCC	B7	I/O	DRAM
SDCKE	A7	I/O	DRAM
TMS	AB5	I/O	CPU
TRDY#	AB12	I/O	PCI
VCC_CORE	H22	P	
VCC_CORE	K5	P	
VCC_CORE	AB19	P	
VCC_CPU	E8	P	
VCC_CPU	G5	P	
VCC_CPU	T5	P	
VCC_CPU	W5	P	
VCC_DRAM	E11	P	
VCC_DRAM	E17	P	

Signal Name	Pin No.	Pin Type	Pwr Plane
VCC_DRAM	E20	P	
VCC_ISA	L22	P	
VCC_ISA	U22	P	
VCC_ISA	Y22	P	
VCC_PCI	AB7	P	
VCC_PCI	AB10	P	
VCC_PCI	AB16	P	
W/R#+INV	AA5	I/O	CPU
XD0+IDE_DWR#	Y26	I/O	ISA
XD1+IDE_DRD#	Y25	I/O	ISA
XD2+IDE_DA0	Y24	I/O	ISA
XD3+IDE_DA1	Y23	I/O	ISA
XD4+IDE_DA2	AA26	I/O	ISA
XD5+IDE_DDACK#	AA25	I/O	ISA
XD6+IDE_DCS1#	AA24	I/O	ISA
XD7+IDE_DCS3#	AA23	I/O	ISA
5VREF	AB21	P	
5VREF	E7	P	

Power Plane Key:
CORE = 3.3V Only
CPU = 3.3V/2.5V
DRAM = 3.3V or 5.0V
ISA = 3.3V or 5.0V
PCI = 3.3V or 5.0V

Note: The pins listed below are 5.0V tolerant inputs, even when their power plane is connected to 3.3V as long as the 5VREF pins of FireStar are connected to +5.0V:

OSC32
OSC_14MHZ
PCICLK
IRQA
IRQB
IRQC
IRQD
IRQ1

3.0 Clock Signal Specifications

3.1 CPU Input Clock Recommendations

Ideal FireStar input clock skew, relative to CPU clock: early by **3.5ns ± 0.5ns**

The complete CPU clock specification is provided below. Note that timings for 2.5V CPUs are not yet available, but will be provided in the next FireStar bulletin.

CPU Clock Recommendations (66MHz, 3.3V)	Min	Max
Clock Period	15ns	--
Duty Cycle	60/40	40/60
Clock High Time[a]	6ns	9ns
Clock Low Time[b]	6ns	9ns
Clock Rise Time, 0.0V to 2.0V	1ns	2ns
Clock Fall Time, 2.0V to 0.0V	1ns	2ns
Clock Jitter	0ns	0.5ns
Clock Skew, FireStar to CPU[c]	3.0ns	4.0ns

a. 2V and above.
b. 0.8V and below.
c. Measured at 1.5V on rising edge of both clocks.

If you have a design in production that does not meet these specifications, do not panic! These requirements are intended to satisfy all applications, and are therefore very strict. Many designs will operate reliably with much looser tolerances, based on signal routing, the chipset features being enabled, the DRAM type being used, etc. So if your design uses different specifications, please contact OPTi so that we can determine whether the timings are necessary for your particular application.

3.2 PCI Input Clock Recommendations

The PCI clock input to FireStar needs to stay within specific tolerances according to the performance level sought.

- If using an asynchronous PCI clock, such as in a system with a 60MHz CPU interface and a 33MHz PCI bus, there is no skew requirement at all. This situation can also apply to a 66MHz CPU clock with a 33MHz PCI clock, as long as the chip is programmed to operate in asynchronous mode.
- Selecting a synchronous PCI clock improves performance because there is no need to waste a clock to synchronize the CPU bus to the PCI bus. In this case, the PCI clock input to FireStar must lag the **early** CPU clock provided to FireStar by 0-4ns.
- Even better performance is available by enabling the CPU-to-PCI buffer in FireStar. In this mode, the PCI clock input to FireStar must lag the early CPU clock provided to FireStar by 1-2ns. This tolerance may not be achievable on all systems.

The table below summarizes these situations.

PCI Clock Recommendations (33MHz, 3.3V)	Min	Max
PCI Input Clock Skew, from FireStar CPU input clock[a] **Asynchronous** PCI Clock	don't care	don't care
PCI Input Clock Skew, from FireStar CPU input clock[a] Sync PCI clock, CPU-to-PCI Buffer **Disabled**	0ns	4ns
PCI Input Clock Skew, from FireStar CPU input clock[a] Sync PCI clock, CPU-to-PCI Buffer **Enabled**	1ns	2ns

a. Measured at 1.5V on rising edge of both clocks

4.0 BIOS Recommendations

The purpose of this section is to assist the system designer in defining the BIOS for FireStar Netlist Revision 3.2 (FireStar Plus) by giving specific details and setup options.

The first portion of this discussion covers basic initial configuration and setup options. The second portion gives the detection and sizing algorithm for FPM/EDO/SDRAM in a FireStar Plus-based system.

4.1 Basic Configuration

The following settings are for basic FireStar initialization.

SYSCFG 19h[3] = 1 (dedicated RAS4#)
SYSCFG 18h = 91h
PCIDV1 64h[5:4] = 11
PCIDV1 4Fh[6] = 1 (enable integrated IDE controller)
SYSCFG 0Eh[7:4] = 0100
SYSCFG 20h[7] = 1
SYSCFG 20h[3:0] = 1111
SYSCFG 21h[1] = 1
SYSCFG 13h[7] = 0
SYSCFG 17h[7] = 0
SYSCFG 17h[4:3] = 00
SYSCFG 28h = 00h
SYSCFG 2Ah[0] = 1
SYSCFG 2Bh-2Dh = 00h
SYSCFG 2Fh = 00h

SYSCFG 22h[7] = 0
SYSCFG 11h[3] = 1 (if L2 is to be enabled)
SYSCFG 1Fh[1] = 1
PCIDV1 71h[0] = 1
SYSCFG 1Eh = CCh
SYSCFG 1Dh[5] = 1
SYSCFG 08h[6] = 0
SYSCFG 08h[1] = 1[1]
SYSCFG 16h[7] = 1 (sets the CMD# pin as CMD#)
SYSCFG 23h[2:1] = 11
PCIDV0 42h[1] = 1
SYSCFG 11h[1:0] = 11
SYSCFG 15h[7:4] = 1010
SYSCFG 15h[0] = 0
SYSCFG 00h[6] = 1
SYSCFG 10h[5] = 1
SYSCFG 0Fh[5] = 0 (set to 1 only when L2 is in WT mode and CPU-to-DRAM buffer is enabled)

Note: 1. The BIOS must write the subsystem vendor ID in PCIDV0 2Ch-2Fh, PCIDV1 2Ch-2Fh, and PCI-IDE 2Ch-2Fh.

These registers are one time writable and must be written by the BIOS before giving control to the OS. These registers may be initialized to 0 if a subsystem vendor ID value is not available.

4.2 Preliminary Memory Configuration

SYSCFG 14h[7] must be enabled prior to setting PCIDV0 44h[0]. These two bits can be set prior to performing FPM/EDO autodetection.

SYSCFG 14h[7] = 1 (enable prior to setting PCIDV0 44h[0])
PCIDV0 44h[0] = 1

Note: The restriction of 32-bit write operations to PCIDV0 44h has been removed.

4.3 Setup Options

The BIOS must follow the specific enable or disable sequence for setup options marked with an asterisk (*). However, if the BIOS can guarantee no DRAM accesses in the course of enabling or disabling these options, the order is not important.

1. SYSCFG 08h[1] should be set to 1 prior to loading any option ROMs, i.e prior to the BIOS performing the PCI Bus scan.

4.3.1 Refresh Mode

A. ISA Refresh:
SYSCFG 2Eh[6] = 1
PCIDV1 64h[0] = 0
SYSCFG 27h[2:0] = 000
PCIDV1 47h[6] = 0

B. Hidden Refresh:
SYSCFG 2Eh[6] = 1
PCIDV1 64h[0] = 0
SYSCFG 27h[2:0] = 000
PCIDV1 47h[6] = 1

C. Non-ISA Refresh: (recommended default)
PCIDV1 64h[0] = 1
SYSCFG 27h[2:0] = 100 for 66MHz CPUCLK
= 101 for 60MHz CPUCLK
= 110 for 50MHz CPUCLK
= 111 for 40MHz CPUCLK
SYSCFG 2Eh[6] = 0
PCIDV1 47h[6] = 0

D. Burst Refresh (same as non-ISA refresh with inclusion of SYSCFG 2Fh[2:0]) :
PCIDV1 64h[0] = 1
SYSCFG 27h[2:0] = 100 for 66MHz CPUCLK
= 101 for 60MHz CPUCLK
= 110 for 50MHz CPUCLK
= 111 for 40MHz CPUCLK
SYSCFG 2Eh[6] = 0
PCIDV1 47h[6] = 0
SYSCFG 2Fh[2:0] = 001

E. Enable SDRAM Self-Refresh in Suspend:
SYSCFG 12h[5:4] = 01
SYSCFG 2Eh[7] = 1
SYSCFG 61h[2] = 1
SYSCFG 66h[7,0] = 1,1
SYSCFG 68h[0] = 1
SYSCFG 6Bh[7] = 1

Note: Refer to Figure 4-1 for information regarding switching between refresh modes.

4.3.2 PCICLK

A. Asynchronous (default):
SYSCFG 10h[0] = 0
SYSCFG 16h[2] = 0

B. Synchronous :
SYSCFG 10h[0] = 1
SYSCFG 16h[2] = 1

4.3.3 PCI Post Write

A. Disable:

SYSCFG 15h[5:4] = 00

B. Post/No Burst:
SYSCFG 15h[5:4] = 01

C. Post/Burst (default):
SYSCFG 15h[5:4] = 10

D. Post/Fast Burst
SYSCFG 15h[5:4] = 11

4.3.4 ISA Retry

A. Disable (default):
PCIDV1 65h[1] = 0
PCIDV0 4Ch[3] = 0
PCIDV0 4Fh[1] = 0
PCIDV0 47h[7] = 0
PCIDV0 47h[5] = 0
PCIDV0 47h[2] = 0
PCIDV0 4Fh[7:2] = 000000
PCIDV0 57h[7:2] = 000000
SYSCFG 22h[4] = 0
SYSCFG 1Eh[4] = 0
SYSCFG 1Eh[3] = 1
SYSCFG 18h[7] = 0

B. Enable[1]:
SYSCFG 18h[7] = 1
SYSCFG 1Eh[4:3] = 11
SYSCFG 22h[4] = 1
PCIDV0 57h[7:2] = 111111
PCIDV0 4Fh[7:2] = 000000
PCIDV0 47h[2] = 1
PCIDV0 47h[5] = 0[2]
PCIDV0 47h[7] = 1
PCIDV0 4Fh[1] = 0
PCIDV0 4Ch[3] = 1
PCIDV1 65h[1] = 1

4.3.5 Buffered DMA[3]

A Disable (default):
SYSCFG 0Eh[6] = 1
SYSCFG 1Dh[3] = 0
PCIDV1 43h[7:6] = 00

B. Enable[4]:
Enable ISA retry
SYSCFG 0Eh[6] = 0
SYSCFG 1Dh[3] = 1
PCIDV1 43h[7:6] = 11
PCIDV1 67h[5] = 1

4.3.6 L2 Cache Control

A. L2 Cache Enable[5]:
SYSCFG 08h[7] = 1
SYSCFG 08h[3] = 1
SYSCFG 16h[7] = 1
SYSCFG 16h[5] = 1
SYSCFG 11h[3] = 1[6]
PCIDV0 4Ch[6] = 1

4.3.7 Cache 3-1-1-1-1-1-1-1 control

A. Disable (default):
SYSCFG 04h[3] = 0
SYSCFG 10h[5] = 0

B. Enable:
SYSCFG 10h[5] = 1
SYSCFG 04h[3] = 1

4.3.8 CAS Precharge

A. 2 CLKS:
SYSCFG 02h[0] = 0

B. 1 CLK: (recommended default)
SYSCFG 02h[0] = 1

4.3.9 DRAM Pipelining

A. Disabled (default):
SYSCFG 08h[2] = 0
SYSCFG 11h[4] = 0
SYSCFG 1Fh[5] = 0

B. Slow (X222-X222)
SYSCFG 08h[2] = 0
SYSCFG 11h[4] = 1
SYSCFG 1Fh[5] = 0

C. Fast (X222-3222)
SYSCFG 1Fh[5] = 1
SYSCFG 08h[2] = 1
SYSCFG 11h[4] = 0

D. Aggressive (X222-2222)

1. Prior to enabling the ISA retry feature the C2D Buffer has to be enabled.
2. Note that the current P2D FIFO code for Rev 2.2 sets PCIDV0 47h[5] = 1. For the 3.2 silicon when ISA retry/BDMA is enabled the P2D FIFO should not set PCIDV0 47h[5] = 1.
3. Buffered DMA has to be enabled once ISA retry has been enabled.
4. DRAM byte merge should be enabled for reliable Buffered DMA operation
5. On the 2.2 Rev, these bits were hardcoded in the silicon and hence the BIOS did not need to program these bits. On the 3.2 silicon, these bits need to be programmed to enable the L2 cache
6. Note that the current code for the 2.2 silicon may be setting SYSCFG 11h[3] = 0. One needs to make sure that this bit is set to 1.

SYSCFG 1Fh[5] = 0
SYSCFG 08h[2] = 1
SYSCFG 11h[4] = 0

4.3.10 DRAM Post Write

A. Disable:
SYSCFG 02h[1] = 0
SYSCFG 0Ch[6] = 0

B. Enable:
SYSCFG 02h[1] = 1
SYSCFG 0Ch[6] = 0

C. Fast: (recommended default)
SYSCFG 02h[1] = 1
SYSCFG 0Ch[6] = 1

4.3.11 *CPU Write to DRAM Buffer

A. Disable (default):
PCIDV0 44h[4] = 0
SYSCFG 2Ch[0] = 0

B. Enable (must be enabled if SDRAM is detected) (recommend that this is enabled always):
SYSCFG 01h[2] = 1
SYSCFG 02h[0] = 1
SYSCFG 02h[1] = 1 (DRAM post write option will also set this bit)
SYSCFG 2Ch[0] = 1
PCIDV0 44h[4] = 1

4.3.12 SDRAM CAS#/Burst Order

A. 3/Intel (default):
SYSCFG 28h = 3Ah

B. 3/Cyrix
SYSCFG 28h = 32h

C. 2/Intel
SYSCFG 28h = 2Ah

D. 2/Cyrix
SYSCFG 28h = 22h

4.3.13 *DRAM Byte Merge

A. Disable (default):
SYSCFG 2Ch[1] = 0
PCIDV0 45h[1] = 0

B. Enable:
SYSCFG 2Ch[1] = 1
PCIDV0 45h[1] = 1

4.3.14 *DRAM Read-Around

A. Disable (default):
SYSCFG 2Ch[5] = 0
PCIDV0 45h[5:4] = 00

B. Enable:
PCIDV0 45h[5:4] = 11
SYSCFG 2Ch[5] = 1

4.3.15 PCI Master Wait States

Recommended default is X-1-1-1-1.

To achieve X-1-1-1-1 PCI master bursts for reads and writes, SYSCFG 20h[3:0] must be set to 1111 (can be hardcoded for the default setting of X-1-1-1-1). The PCI-to-DRAM buffer MUST be enabled (default setup option). If the PCI-to-DRAM buffer is disabled, SYSCFG 20h[3:2] can be set to either 01 or 10 for X-3-3-3 or X-2-2-2 write bursts respectively, and SYSCFG 20h[1:0] can be set to either 01 or 10 for X-3-3-3 or X-2-2-2 read bursts respectively. SYSCFG 20h[3:2] or SYSCFG 20h[1:0] MUST NOT be set to 11 when the PCI-to-DRAM buffer is disabled.

4.3.16 *PCI Write to DRAM Buffer

A. Disable Read / Disable Write:
SYSCFG 2Ah[2] = 0
PCIDV0 44h[6] = 0
SYSCFG 2Ah[3] = 0
PCIDV0 44h[5] = 0
PCIDV1 64h[7] = 0
PCIDV1 64h[6] = 0

B. Disable Read / Enable Write:
SYSCFG 2Ah[2] = 0
PCIDV0 44h[6] = 0
PCIDV0 44h[5] = 1
SYSCFG 2Ah[3] = 1
PCIDV1 64h[7] = 1
PCIDV1 64h[6] = 0

C. Enable Read / Disable Write:
SYSCFG 2Ah[3] = 0
PCIDV0 44h[5] = 0
PCIDV0 44h[6] = 1
SYSCFG 2Ah[2] = 1
PCIDV1 64h[7] = 0
PCIDV1 64h[6] = 1

D. Enable Read / Enable Write (default):
PCIDV0 44h[6] = 1
PCIDV0 44h[5] = 1
SYSCFG 2Ah[3] = 1
SYSCFG 2Ah[2] = 1
PCIDV1 64h[7] = 1
PCIDV1 64h[6] = 1

4.3.17 *EDO Timing:

First turn on EDO options in SYSCFG 1Ch[7:0].

A. 8-2-2-2 (default):
SYSCFG 2Dh[5:0]= 000000
SYSCFG 2Dh[6] = 0
SYSCFG 26h[3] = 0
SYSCFG 1Fh[4] = 0
SYSCFG 1Dh[4] = 0

7-2-2-2:
SYSCFG 2Dh[5:0]= 000000
SYSCFG 2Dh[6] = 0
SYSCFG 26h[3] = 0
SYSCFG 1Dh[4] = 1
SYSCFG 1Fh[4] = 0

6-2-2-2:
SYSCFG 2Dh[5:0]= 000000
SYSCFG 2Dh[6] = 0
SYSCFG 26h[3] = 0
SYSCFG 1Dh[4] = 1
SYSCFG 1Fh[4] = 1

5-2-2-2:
SYSCFG 1Dh[4] = 1
SYSCFG 1Fh[4] = 1
SYSCFG 26h[3] = 1
SYSCFG 2Dh[6] = 1
SYSCFG 2Dh[5:0]= Set according to the banks that have been detected with EDO

Note: The CPU-to-DRAM, PCI-to-DRAM, and CPU-to-PCI buffers may be turned on just before the INT19 handler. The only exception is the CPU-to-DRAM buffer, if SDRAM is detected in the system. Also, it is recommended that the CPU-to-PCI buffer be turned on first, followed by the CPU-to-DRAM buffer and PCI-to-DRAM buffer.

On a soft reset, the BIOS must disable these buffers after waiting for at least 250 CPU clocks in order for the data in the buffers to be flushed. The buffers can again be enabled just before the INT19 handler. The BIOS must ensure that there are no intervening DRAM accesses during the course of enabling or disabling these buffers.

4.4 Refresh Modes

It is recommended that the BIOS initialize the registers for “no refresh” at power-on. It is also recommended that while switching between refresh modes, the BIOS first disable refresh by programming the following registers in the sequence mentioned. The BIOS may then follow the state diagram (Figure 4-1) to change refresh modes, if required.

Disable Refresh Sequence (from any state):
PCIDV1 47h[6] = 0
PCIDV1 64h[0] = 1
SYSCFG 2Eh[6] = 0
SYSCFG 2Fh[2:0] = 000
SYSCFG 27h[2:0] = 000

4.5 FPM/EDO/SDRAM Detection Algorithm

FireStar can support the following DRAM types:

- Fast Page Mode DRAM (FPM DRAM)
- Extended Data-Out DRAM (EDO DRAM)
- Synchronous DRAM (SDRAM)

The following steps detail (in chronological order) the FPM/EDO/SDRAM detection algorithm for FireStar.

1. Power on.
2. Wait for 200 µs. Ensure that L1 and L2 cache are off. Also ensure that refresh has been disabled.
3. If any of the RAS lines are to be mapped as PIO or alternate function, program the associated registers at this time.
4. Set SYSCFG 14h[7] = 1, and PCIDV0 44h[0] = 1 in order to enable the clocked mode of operation in the DBC (Data Buffer Controller) module.
5. Set SYSCFG 28h according to the following options to set up the operating mode parameters for SDRAM operation. Also set SYSCFG 29h = 00h, and PCIDV0 4Dh[5:4] = 00.

   For CAS Latency = 3, interleaved burst (Intel), set SYSCFG 28h = 3Ah (Default)

   For CAS Latency = 3, linear burst (Cyrix), set SYSCFG 28h = 32h

   For CAS Latency = 2, interleaved burst (Intel), set SYSCFG 28h = 2Ah

   For CAS Latency = 2, linear burst (Cyrix), set SYSCFG 28h = 22h

6a. Enable the CPU-to-DRAM buffer :

SYSCFG 01h[2] = 1
SYSCFG 02h[1:0] = 11
SYSCFG 2Ch[0] = 1
PCIDV0 44h[4] = 1

6b. Also set the following bits to enable read-around:
SYSCFG 2Ch[5] = 1
PCIDV0 45h[5:4] = 11

Figure 4-1 Refresh Mode State Diagram

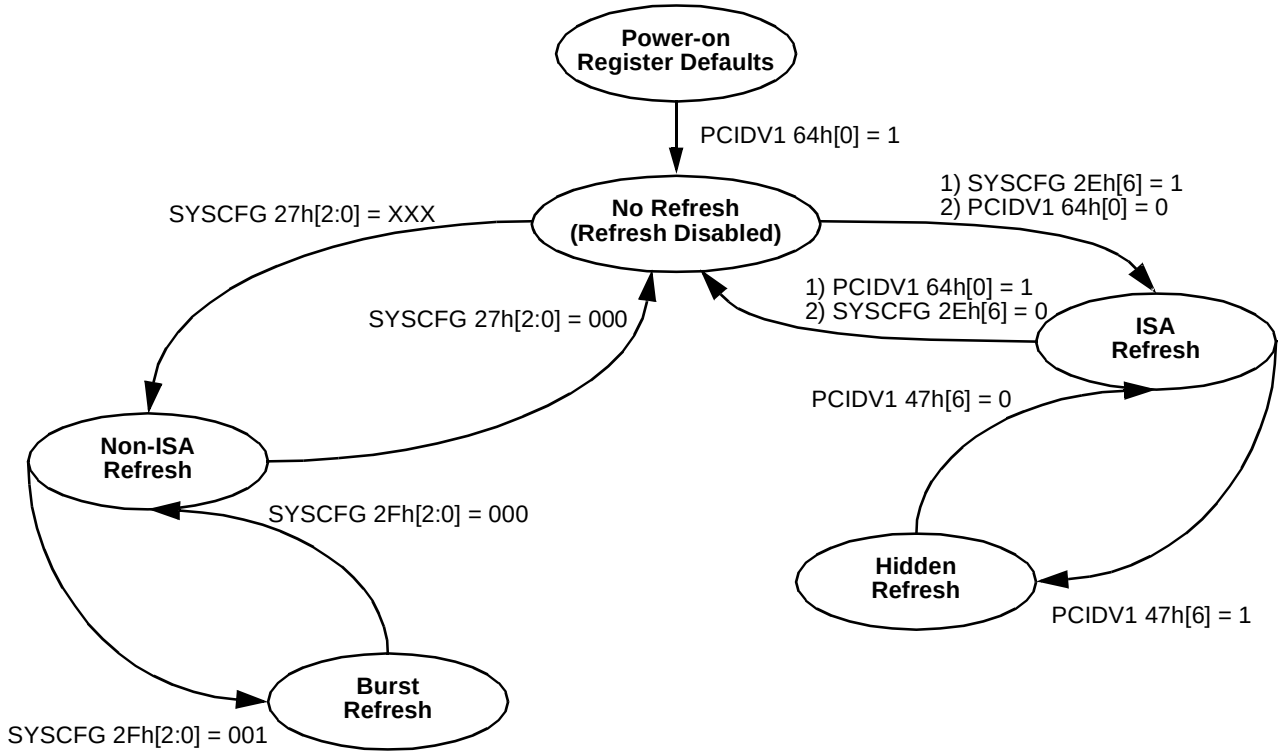

XXX: 100 = 66MHz
101 = 60MHz
110 = 50MHz
111 = 40MHz

6c. The following bit needs to be set to enable the SDRAS# and SDCAS# signals to be driven aggressively.
PCIDV0 48h[4] = 1

Note: Step 6a must be performed while testing SDRAM. SDRAM will not work if the CPU-to-DRAM buffer is turned off.

If SDRAM is present in the system, step 6b and 6c must be performed before testing the L2 cache. SDRAM will not work with L2 cache if step 6b and 6c are not performed.

6d. The following bits need to be set to ensure proper operation of SDRAMs
PCIDV0 4Ch[4] = 1
PCIDV0 55h[7:6] = 11

7a. Set X = 0 (X is bank count variable).

7b. Set Y = 3, 4, or 5. This depends on whether RAS4# and/or RAS5# have been enabled. If only one of them has been enabled, then set Y = 4. If both have been enabled then set Y = 5, and if neither of them has been enabled then set Y = 3.

8. Set the size corresponding to Bank X in SYSCFG 13h[6:4], 13h[2:0], 14h[6:4], 14h[2:0], 19h[6:4] (If RAS5# has been enabled), and 19h[2:0] (If RAS4# has been enabled and MA12 disabled) to 2MB. Set the size for all other banks to 0MB. Set the DRAM type for Bank X as “SDRAM” in SYSCFG 29h[3:0], and PCIDV0 4Dh[5:4] (If banks 4 and/or 5 have been enabled).

9. Set PCIDV0 48h[2:0] = 010 for bank precharge command for SDRAM banks.

10. Read memory location 0h in order to precharge all open pages in Bank X, if Bank X is populated with SDRAM.

11. Set X = X + 1.

12. If X <= Y, go back to Step 8. If X > Y, set the size for all banks as 0MB, SYSCFG 29h[3:0] = 0000, PCIDV0 4Dh[5:4] = 00, and SYSCFG 1Ch[7:2] = 000000. Continue with Step 13.

13. Set SYSCFG 29h[3:0] = 0000, PCIDV0 4Dh[5:4] = 00, and SYSCFG 1Ch[7:2] = 000000 for Fast Page Mode DRAM operation only.

14. Set PCIDV0 48h[5] = 1 to disable RASx# generation to a bank with 0 MB during refresh cycles.
15. Enable chosen refresh mode (refer to *"Setup Options"* on page 11 and to Figure 4-1 on page 15 for programming bits).
16. Wait for eight refresh periods and then set PCIDV0 48h[2:0] = 000.
17. Follow the algorithm in the FireStar Plus preliminary databook for FPM/EDO detection on Banks 0-5. Store the information, without programming the chipset registers. Reset all the bank sizes to 0MB after completing the detection. Also set SYSCFG 29h[3:0] = 0000, PCIDV0 4Dh[5:4] = 00, and SYSCFG 1Ch[7:2] = 000000. If all the banks are identified with either Fast Page Mode or EDO DRAM, skip to Step 29. Else, continue with Step 18.
18. Disable refresh (in sequence):
    PCIDV1 47h[6] = 0
    PCIDV1 64h[0] = 1
    SYSCFG 2Eh[6] = 0
    SYSCFG 2Fh[2:0] = 000
    SYSCFG 27h[2:0] = 000
19. Set PCIDV0 47h[7] = 1 to enable the SDRAM data path in the DBC module.
20. Set the DRAM type only for bank not detected with either FPM DRAM or EDO DRAM, to “SDRAM” in SYSCFG 29h[3:0] and PCIDV0 4Dh[5:4]. Also set the size corresponding to the current bank to 2MB in SYSCFG 13h[6:4], 13h[2:0], 14h[6:4], 14h[2:0], 19h[6:4], and 19h[2:0]. Set the bank size for all other banks to 0MB.
21. Set PCIDV0 48h[2:0] = 001 to enable NOP command. Read from address 0h to force the current SDRAM bank to the NOP state.
22. Set PCIDV0 48h[2:0] = 100 for SDRAM refresh mode. Read from address 0h eight times.
23. Set PCIDV0 48h[2:0] = 011 to enable Mode Register Set command.
24. Read from the following addresses to load the 3CLK/2CLK CAS latency, interleaved/linear access, and burst length of 4 information into the current SDRAM bank.
    For CAS Latency = 3, interleaved burst (Intel), read from address 000001D0h (Default)

    For CAS Latency = 3, linear burst (Cyrix), read from address 00000190h

    For CAS Latency = 2, interleaved burst (Intel), read from address 00000150h

    For CAS Latency = 2, linear burst (Cyrix), read from address 00000110h

25. Set PCIDV0 48h[2:0] = 100 for SDRAM refresh mode. Read from address 0h eight times.
26. Set PCIDV0 48h[2:0] = 000 to enable normal SDRAM mode.
27. Detect SDRAM presence or absence on the current DRAM bank by writing a known pattern to an address within the size enabled for this bank, reading back from this same address, and comparing it to the known written pattern.
28. Store the SDRAM presence or absence information. If any non-FPM/EDO banks remain, go to Step 20. Else, program all the bank sizes to 0MB, and continue with Step 29.

29a. Retrieve information about the presence or absence of FPM/EDO/SDRAM in each of the banks and program the following registers accordingly:
    For banks detected with FPM DRAM, set the corresponding bits in SYSCFG 29h[3:0] and SYSCFG 1Ch[7:2] = 0.
    For banks detected with EDO DRAM, set the corresponding bits in SYSCFG 29h[3:0] = 0, and SYSCFG 1Ch[7:2] = 1.
    For banks detected with SDRAM, set the corresponding bits in SYSCFG 29h[3:0] = 1, and SYSCFG 1Ch[7:2] = 1.

29b. If all the banks are FPM/EDO DRAM set PCIDV0 47h[7] = 0.
    To turn off the CPU-to-DRAM buffer, set the following registers:
    PCIDV0 44h[4] = 0
    SYSCFG 2Ch[0] = 0

    To turn off the read-around feature, follow these steps:
    PCIDV0 45h[5:4] = 00
    SYSCFG 2Ch[5] = 0

    If SDRAM is detected in any of the banks, the CPU-to-DRAM buffer, and the read-around feature MUST NOT be turned off.

30. Set PCIDV0 48h[2:0] = 000 for normal SDRAM mode.
31. Enable chosen refresh mode (refer to *"Setup Options"* on page 11 and to Figure 4-1 on page 15 for programming bits).
32. Wait for eight refresh periods.
33. For the banks populated with FPM or EDO DRAM, follow the algorithm (FPM/EDO sizing algorithm), given later on in this document, to detect the size. For banks populated with SDRAM, follow the algorithm (SDRAM sizing algorithm), given later on in this document, to detect the size.
34. Program the size information in the chipset registers and

exit.

Note: Bank 4 support can be enabled by setting SYSCFG 19h[3] = 1, and by programming SYSCFG 19h[2:0] for size. Bank 5 can only be enabled by setting SYSCFG 19h[7] in which case L2 cache cannot be supported. Bank 5 size information can be programmed in SYSCFG 19h[6:4].

4.6 DRAM Sizing Algorithm

This subsection describes the DRAM detection and sizing algorithm on the FireStar Plus. The algorithm will detect all the possible DRAM configurations.

4.6.1 DRAM Detection and Sizing Algorithm

1. Turn L1 and L2 cache off.

2a. Set i = 0 (bank number to be tested).

2b. If RAS4# and RAS5# have been enabled then the number of iterations, y= 6. If only RAS4# or RAS5# has been enabled then the number of iterations, y = 5. If neither RAS4# nor RAS5# have been enabled then the number of iterations, y = 4.

2c. If MA13 functionality needs to be enabled then the following register bits need to be enabled

PCIDV0 4Ch[1] = 1

SYSCFG ACh[5] = 1

2d. If MA12 functionality needs to be enabled (to support 64Mbit EDO) then the following register bits need to be set

PCIDV1 53h[6:5] = 11

3. DRAM detection:
   - If RAS4# has been enabled then there is no support for 64Mbit DRAMs and hence one can skip the sizing portions for the 13x11, 13x10, and 13x9 parts. If RAS4# has not been enabled then 64Mbit DRAMs are supported.
   - For i > 3, asymmetric DRAMs are not supported (i.e where R > C +1). In that case one can skip the asymmetric sizing portion for iterations where i = 4 or 5.
   - If i > y, exit. If not, set the size for Bank i to be 128MB.
   - Set the size for all other banks as 0MB in the appropriate SYSCFG 13h, 14h and 19h registers.
   - Write address 00000000h with pattern 55555555h.
   - Read from address 0000000h.
     - If the pattern that is read back is not 55555555h, Bank i does not contain any DRAM. Increment i, and go back to Step 3.
     - If the pattern that is read back is 55555555h, Bank i contains DRAM. Continue with Step 4.

4. Test of 128MB (12x12 or 13x11):
   - Bank i was set for 128MB in the previous step.
   - Write address 00000000h with pattern 55555555h.
   - Write address 04000000h (A26 = 1) with pattern AAAAAAAAh.
   - Read from address 00000000h.
     - If it is 55555555h, Bank i contains 128MB. Store this information, for updating the size registers in the corresponding SYSCFG register after exiting from this program. Increment i, and continue from Step 3.
     - If the pattern that is read back is not 55555555h, Bank i has less than 128MB. Continue with Step 5.

5A. Test of 64MB (12x11):
   - Set the size for Bank i as 64MB. Set the size for all other banks as 0MB.
   - Write address 00000000h with pattern 55555555h.
   - Write address 01000000h (A24 = 1) with pattern AAAAAAAAh.
   - Write address 02000000h (A25 = 1) with pattern FEDCBA98h.
   - Read from address 00000000h.
     - If it is 55555555h, Bank i contains 64MB and 12x11 parts are being used. Store this information, for updating the size registers in the corresponding SYSCFG register after exiting from this program. Increment i, and continue from Step 3.
   - If the pattern that is read back is not 55555555h then
   - i) If RAS4# has not been enabled and/or i > 3, then go to Step 6A.
   - ii) Else go to Step 5B.

5B. Test of 64MB (13x10):
   - Set the corresponding bank in SYSCFG 24h to reflect a x10 asymmetric DRAM.
   - Write address 00000000h with pattern 55555555h
   - Write address 02000000h (A25 = 1) with pattern AAAAAAAAh
   - Read from address 00000000h.
   - If it is 55555555h, Bank i contains 13x10 64MB DRAM. Store this information, for updating the size in the corresponding SYSCFG register after exiting from this program. Increment i, and continue from Step 3
   - If it does not read back as 55555555h, then Bank i has less than 64MB. Continue with Step 6A.

6A. Test of 32MB (11x11):
   - Set the size for Bank i as 32MB.
   - Set the size for all other banks as 0MB.
   - Write address 00000000h with pattern 55555555h.
   - Write address 01000000h (A24 = 1) with pattern AAAAAAAAh.
   - Read from address 00000000h.
     - If it is 55555555h, Bank i contains 11x11 32MB DRAM. Store this information, for updating the size in the corresponding SYSCFG register after exiting from this program. Increment i, and continue from Step 3.
     - If the pattern that is read back is not 55555555h,

Bank i has either 12x10 32MB, 13x9 32MB, or less than 32MB of DRAM. Then:

-i) If i > 3, then go to Step 7B.
-ii) Else go to Step 6B

6B. Test of 32MB (12x10):
- The DRAM size was set as 32MB in Step 6A. Set the asymmetric bits corresponding to Bank i in SYSCFG 24h as x10.
- Write address 00000000h with pattern 55555555h.
- Write address 00400000h (A22 = 1) with pattern AAAAAAAAh.
- Write address 01000000h (A24 = 1) with pattern FEDCBA98h.
- Read from address 00000000h.
  - If it is 55555555h, Bank i contains 12x10 32MB DRAM. Store this information, for updating the size registers after exiting from this program. Increment i, and continue from Step 3.
  - If the pattern that is read back is not 55555555h, Bank i has either 13x9 32MB DRAM, or less than 32MB of DRAM.Then:

-i) If RAS4# has not been enabled then go to Step 6C.
-ii) Else go to Step 7A.

6C. Test of 32MB (13x9):
- Set the size for Bank i as 32MB.
- Also set the asymmetric DRAM bits for Bank i in SYSCFG 24h as x9
- Write address 00000000h with pattern 55555555h.
- Write address 01000000h (A24 = 1) with pattern AAAAAAAAh.
- Read from address 00000000h.
- If it is 55555555h, Bank i has 13x9 32MB DRAM. Store this information, for updating the size registers after exiting from this program. Increment i and continue with Step 3.
- If the pattern that is read back is not 55555555h then go to Step 7A.

7A. Test of 16MB (12x9):
- Set the size for Bank i as 16MB.
- Also set the asymmetric DRAM bits for Bank i in SYSCFG24h as x9.
- Write address 00000000h with 55555555h.
- Write address 00000800h (A11 = 1) with pattern AAAAAAAAh.
- Write address 00800000h (A23 = 1) with data FEDCBA98h.
- Read from address 00000000h.
  - If it is 55555555h, Bank i has 12x9 DRAM. Store this information, for updating the size registers after exiting from this program. Increment i, and continue from Step 3.
  - If the data that is read back is not 55555555h, continue with Step 7B.

7B. Test of 16MB (11x10):
- Set the size for Bank i as 16MB.
- Also set the asymmetric DRAM bits for Bank i in SYSCFG24h as “00”.
- Write address 00000000h with 55555555h.
- Write address 00400000h (A22 = 1) with pattern AAAAAAAAh.
- Write address 00800000h (A23 = 1) with data FEDCBA98h.
- Read from address 00000000h.
  - If it is 55555555h, Bank i has 11x10 DRAM. Store this information, for updating the size registers after exiting from this program. Increment i, and continue from Step 3.
  - If the data that is read back is not 55555555h, continue with Step 8A.

8A. Test of 8MB (12x8, 11x9, or 10x10):
- Set the size for Bank i as 8MB.
- Also set the asymmetric DRAM bits for Bank i in SYSCFG24h as x8.
- Write address 00000000h with 55555555h.
- Write address 00400000h (A22 = 1) with data AAAAAAAAh.
- Read from address 00000000h.
  - If it is 55555555h, Bank i has 12x8 or 10x10 DRAM; continue from Step 8B.
  - If the data that is read back is not 55555555h, go to Step 8C.

8B. Distinguish between 12x8 and 10x10:
- The size for Bank i was set as 8MB, 12x8. Address 00000000h must still have 55555555h.
- Write address 00200000 with data AAAAAAAAh (A22 = 0, A21 = 1).
- Read from address 00000000h.
  - If it is pattern 55555555h, Bank i has 12x8 DRAM. Store this information, for updating the size registers after exiting from this program. Increment i and continue with Step 3.
  - If the data that is read back is not 55555555h, Bank i has 10x10 DRAM. Store this information, for updating the size registers after exiting from this program. Reset the bits corresponding to Bank i in SYSCFG24h to 00b. Increment i and continue with Step 3.

8C. Test of 8MB (11x9):
- Set the asymmetric DRAM bits for Bank i in SYSCFG24h as x9.
- Write address 00000000h with 55555555h.

- Write address 00400000h (A22 = 1) with data AAAAAAAAh.
- Write address 00000800h (A11 = 1) with data FEDCBA98h.
- Read from address 00000000h.
  - If it is 55555555h, Bank i has 11x9 DRAM. Store this information, for updating the size registers after exiting from this program. Increment i and continue from Step 3.
  - If the data that is read back is not 55555555h, continue with Step 9A.

9A. Test of 4MB (11x8):
- Set the size for Bank i as 4MB.
- Also set the asymmetric DRAM bits for Bank i in SYSCFG24h as x8.
- Write address 00000000h with 55555555h.
- Write address 00200000h (A21 = 1) with data AAAAAAAAh.
- Read from address 00000000h.
  - If it is 55555555h, Bank i has 11x8 DRAM. Store this information, for updating the size registers after exiting from this program. Increment i and continue from Step 3.
  - If the data that is read back is not 55555555h, go to Step 9B.

9B. Test of 4MB (10x9) and 2MB (10x8 or 9x9):
- Set the size for Bank i as 4MB.
- Also set the asymmetric DRAM bits for Bank i in SYSCFG24h as “00”.
- Write address 00000000h with 55555555h.
- Write address 00000800h (A11 = 1) with pattern AAAAAAAAh.
- Write address 00200000h (A21 = 1) with data FEDCBA98h.
- Read from address 00000000h.
  - If it is 55555555h, Bank i has 4MB (10x9) DRAM. Store this information, for updating the size registers after exiting from this program. Increment i, and continue from Step 3.
  - If the data that is read back is AAAAAAAAh, Bank i has 2MB (10x8) DRAM. Store this information, for updating the size registers after exiting from this program. Set the asymmetric bits corresponding to this bank in SYSCFG24h for “x8” DRAM. Increment i and continue from Step 3.
  - If the data that is read back is FEDCBA98h, Bank i has 2MB (9x9) DRAM. Store this information, for updating the size registers after exiting from this program. Increment i and continue from Step 3.

6. EXIT:Follow the guidelines specified in Table 4-1 for programming DRAM size and asymmetricity for each bank. Set the appropriate bits and exit from DRAM sizing routine.

Note: After a write, and before a read operation, another valid address must be written with data 00000000h to clear bus capacitance.

Table 4-1 Programming Size Registers

DRAM Size	Bank Size Setting in SYSCFG 13h or 14h	Bank Asymmetricity Setting in SYSCFG 24h
12x12	128MB	Symmetric
12x11	64MB	Symmetric
12x10	32MB	x10
12x9	16MB	x9
12x8	8MB	x8
11x11	32MB	Symmetric
11x10	16MB	Symmetric
11x9	8MB	x9
11x8	4MB	x8
10x10	8MB	Symmetric
10x9	4MB	Symmetric
10x8	2MB	x8
9x9	2MB	Symmetric

4.7 SDRAM Sizing Algorithm

It is assumed that by the time this code is executed, the detection (FPM/EDO/SDRAM) has already been completed. Therefore, banks which are populated with SDRAMs have been identified.

If one needs to support 64Mbit SDRAMs then prior to starting the SDRAM sizing algorithm, the following register bits need to be set

SYSCFG ACh[5] = 1

PCIDV0 4Ch[1] = 1

PCIDV1 53h[6:5] = 10

Assume "x" banks have SDRAMs:

1. Set 1st bank that has SDRAM to size 128MB i.e., the appropriate SYSCFG 13h, 14h, 19h register should be set for 128MByte bank size and the corresponding bank should be set to 64Mb in PCIDV0 54h[11:6]
   - Set all other bank sizes to 0.
   - Write address 00000000h with pattern 55555555h.
   - Write address 01000000h with pattern 12345678h (A24 =1).
   - Write address 04000000h with pattern AAAAAAAAh (A26 = 1).
   - Read from address 00000000h - if it contains 55555555h then the bank contains 128Mbytes and it contains 16Mb x 4 SDRAM components.
     - If 128Mbytes then start the procedure from point "1" for the other SDRAM banks.
     - If not 128MBytes then go to "2"

2. Set the bank size to 64MB i.e., the appropriate SYSCFG 13h, 14h, 19h register should be set for 64MByte bank size and the corresponding bank should be set to 64Mb in PCIDV0 54h[11:6].
   - Set all other bank sizes to 0.
   - Write address 00000000h with pattern 55555555h
   - Write address 01000000h with pattern 12345678h (A24 =1)
   - Write address 02000000h with pattern AAAAAAAAh (A25 =1).
   - Read from address 00000000h - if it contains 55555555h then the bank contains 64Mbytes and it contains 8Mb x 8 SDRAM components.
     - If 64Mbytes then start the procedure from point "1" for the other SDRAM banks.
     - If not 64MBytes then go to "3a".

3a. Set the bank size to 32MB i.e., the appropriate SYSCFG 13h, 14h, 19h register should be set for 32MByte bank size and the corresponding bank should be set to 64Mb in PCIDV0 54h[11:6].
   - Set all other bank sizes to 0.
   - Write address 00000000h with pattern 55555555h.
   - Write address 01000000h with pattern AAAAAAAAh (A24 = 1).
   - Read from address 00000000h - if it contains 55555555h then the bank contains 32Mbytes and it contains 4Mb x 16 SDRAM components.
     - If 32Mbytes (4Mbx16) then start the procedure from point "a" for the other SDRAM banks.
     - If not 32MBytes then go to "3b".

3b. Set the bank size to 32MB i.e., the appropriate SYSCFG 13h, 14h, 19h register should be set for 32MByte bank size and the corresponding bank should be set to 16Mb in PCIDV0 54h[11:6].
   - Set all other bank sizes to 0.
   - Write address 00000000h with pattern 55555555h.
   - Write address 01000000h with pattern AAAAAAAAh (A24 = 1).
   - Read from address 00000000h - if it contains 55555555h then the bank contains 32Mbytes and it contains 4Mb x 4 SDRAM components.
     - If 32Mbytes then start the procedure from point "1" for the other SDRAM banks.
     - If not 32MBytes then go to "4".

4. Set the bank size to 16MB, i.e., the appropriate SYSCFG 13h, 14h, 19h register should be set for 16MByte bank size and the corresponding bank should be set to 16Mb in PCIDV0 54h[11:6].
   - Set all other bank sizes to 0.
   - Write address 00000000h with pattern 55555555h.
   - Write address 00800000h with pattern AAAAAAAAh (A23 = 1).
   - Read from address 00000000h - if it contains 55555555h then the bank contains 16Mbytes and it contains 2Mb x 8 SDRAM components.
     - If 16Mbytes then start the procedure from point "1" for the other SDRAM banks.
     - If not 16MBytes then go to "5".

5. Set the bank size to 8MB, i.e., the appropriate SYSCFG 13h, 14h, 19h register should be set for 8MByte bank size and the corresponding bank should be set to 16Mb in PCIDV0 54h[11:6].
   - Set all other bank sizes to 0.
   - Write address 00000000h with pattern 55555555h.
   - Write address 00400000h with pattern AAAAAAAAh (A22 = 1).
   - Read from address 00000000h - if it contains 55555555h then the bank contains 8Mbytes and it contains 1Mb x 16 SDRAM components.
     - If 8Mbytes then start the procedure from point "1" for the other SDRAM banks.
     - If not 8MBytes then go to the bank that has an invalid SDRAM size. Disable this bank and go back to "1".

4.8 Integrated Local Bus Enhanced IDE Interface

The IDE controller in FireStar is based on OPTi's Bus Master PCI IDE Module (MIDE) which is designed as a fast and flexible interface between the PCI bus and two channels of IDE devices (up to four devices). Each channel supports an integrated 8-level (32-byte) read prefetch FIFO and an 8-level (32-byte) posted write FIFO for bus mastering burst read and write operations on the PCI bus, substantially improving the performance over the typical slave IDE implementations. The Enhanced ATA Specification can be supported by programming the internal registers up to IDE PIO Mode 5 and Single- and/or Multi-Word DMA Mode 2 timing. The IDE controller also supports Mode 0, 1, & 2 of the UltraDMA Specification. The module is designed to be backward compatible to the Viper-N+ IDE interface.

FireStar Plus includes support for the UltraDMA IDE protocol. The mechanism for enabling this mode of operation is documented in this section. To maintain continuity the full "Integrated Local Bus Enhanced IDE Interface" section from the FireStar ACPI Data Book has been included in this addendum.

When the internal IDE controller is disabled, FireStar passes the IDE cycles to the ISA bus if the cycles are not claimed on the PCI bus.

4.8.1 Bus Mastering IDE Controller

FireStar features a new bus mastering IDE controller interface. Multiplexed operation allows the chip to very efficiently use only two dedicated pins (or four for four-drive bus mastering) yet still allows IDE operation that is fully concurrent with every other high-speed system activity.

The IDE controller operates in either programmed I/O (PIO) mode, bus mastering mode, or emulated bus mastering mode. The origin of the control signals is programmable/configurable:

- All control signals - primary & secondary - could be multiplexed on the XD[7:0] lines.
- The entire XD bus could be dedicated to drive the IDE control signals.
- The PIO pins could be programmed to generate the IDE control signals.

External buffers may be required to interface these signals to the IDE drive, but can be eliminated in certain designs.

Dedicated signal DBEW#, and optional signals DBEX#, DBEY#, and DBEZ# (on PIO pins), are provided to enable separate sets of buffers for each of the two supported drive channels (two drives per channel). The drive read and write commands come from the XD bus pins, qualified by DBE#. PCIDV1 AEh and AFh select the decoding that will take place at each DBE# pin (see Table 4-2).

Decoding for cable 0 can be disabled completely through PCIDV1 4Fh[5] if only cable 1 is used locally (for example, if a docking station is connected and system boot should occur from the docking station drive instead of from the local drive).

Bus mastering requires the addition of the DDRQ and DDACK# signal pair for each drive cable. The DDRQ0-1 signals are supported as separate inputs on the chip; DDACK0-1# are multiplexed onto the XD lines like the other control lines, since they are meaningful only when a cycle is taking place (DBE# signal active).

Table 4-2 IDE Pin Programming Registers

7	6	5	4	3	2	1	0
PCIDV1 AEh			**DBE# Select Register 1**				**Default = 01h**
Reserved	DBEX# selection: 000 = Disable (Default) 001 = DBE0#: Cable 0, Drives 0 and 1 010 = DBE0-0#: Cable 0, Drive 0 011 = DBE0-1#: Cable 0, Drive 1 100 = Decode all IDE accesses 101 = DBE1#: Cable 1, Drives 0 and 1 110 = DBE1-0#: Cable 1, Drive 0 111 = DBE1-1#: Cable 1, Drive 1			Reserved	DBEW# selection: 000 = Disable 001 = DBE0#: Cable 0, Drives 0 and 1(Default) 010 = DBE0-0#: Cable 0, Drive 0 011 = DBE0-1#: Cable 0, Drive 1 100 = Decode all IDE accesses 101 = DBE1#: Cable 1, Drives 0 and 1 110 = DBE1-0#: Cable 1, Drive 0 111 = DBE1-1#: Cable 1, Drive 1		
PCIDV1 AFh			**DBE# Select Register 2**				**Default = 00h**

Table 4-2 IDE Pin Programming Registers

7	6	5	4	3	2	1	0
Reserved	DBEZ# selection: 000 = Disable (Default) 001 = DBE0#: Cable 0, Drives 0 and 1 010 = DBE0-0#: Cable 0, Drive 0 011 = DBE0-1#: Cable 0, Drive 1 100 = Decode all IDE accesses 101 = DBE1#: Cable 1, Drives 0 and 1 110 = DBE1-0#: Cable 1, Drive 0 111 = DBE1-1#: Cable 1, Drive 1			Reserved	DBEY# selection: 000 = Disable (Default) 001 = DBE0#: Cable 0, Drives 0 and 1 010 = DBE0-0#: Cable 0, Drive 0 011 = DBE0-1#: Cable 0, Drive 1 100 = Decode all IDE accesses 101 = DBE1#: Cable 1, Drives 0 and 1 110 = DBE1-0#: Cable 1, Drive 0 111 = DBE1-1#: Cable 1, Drive 1		
PCIDV1 4Fh		**Miscellaneous Control Register C - Byte 1**					**Default = 20h**
		Primary IDE interface (1F0h): 0 = Disable 1 = Enable (Default)					

4.8.1.1 Isolation of Drives

Most notebook designs require that each IDE drive on a cable be capable of individual power-down without affecting other drives in the system. For example, an IDE CD-ROM and IDE hard drive that share the same cable could be power-managed separately to avoid having to keep the CD-ROM alive while the hard drive is active (or vice-versa).

The FireStar solution includes programmable pin options described below to allow easier isolation in typical implementations.

4.8.1.2 IDE Control Pinout Options

FireStar provides several programmable pin options to optimize the system design and reduce the need for external TTL. Refer to Section 3.3, "Programmable I/O Pins" in the original FireStar ACPI Preliminary Data Book (PN: 912-2000-015 Rev 1.0, dated February 28, 1997, page 33) for information on assigning these pin functions.

- **DBE0A/B# and DBE1A/B#**
  FireStar can be programmed to generate separate buffer enable signals for each drive on the cable. Normally each cable has its own buffer enable: DBE0# for cable 0, decoded from I/O ports 1F0-7+3F6-7h; and DBE1# for cable 1, decoded from I/O ports 170-7+376-7h. The A/B# feature takes this decoding one step further and selects "drive A" or "drive B" on the cable according to the value last written to bit 1F6h[4] for cable 0, or 176h[4] for cable 1.
- **Dedicated DDACK#**
  Bus mastering IDE drives must use one DDRQ/DDACK# pair per cable. The standard FireStar pinout provides DDRQ as dedicated inputs, but uses an XD bus pin qualified by DBE# to drive DDACK# to the drive. The total number of signals controlled by DBE# in this case is 9, a very inconvenient value for use with 8-bit TTL. Therefore, FireStar allows for up to two dedicated DDACK# pins, one for each cable.
- **Dedicated DRD#, DWR#, DCS1#, DCS3#, DA[2:0]**
  In a small system, unused pins can be replaced with IDE control signals. This feature allows the designer to avoid using any TTL to support the IDE. This solution is especially well suited for an ISA-less system, so that the SD[15:0] bus can be used solely to support the IDE drives.

Figure 4-2, *IDE Interface Using Individual TTL*, illustrates the connections typically required for a fully-isolated IDE drive.

Figure 4-2 IDE Interface Using Individual TTL

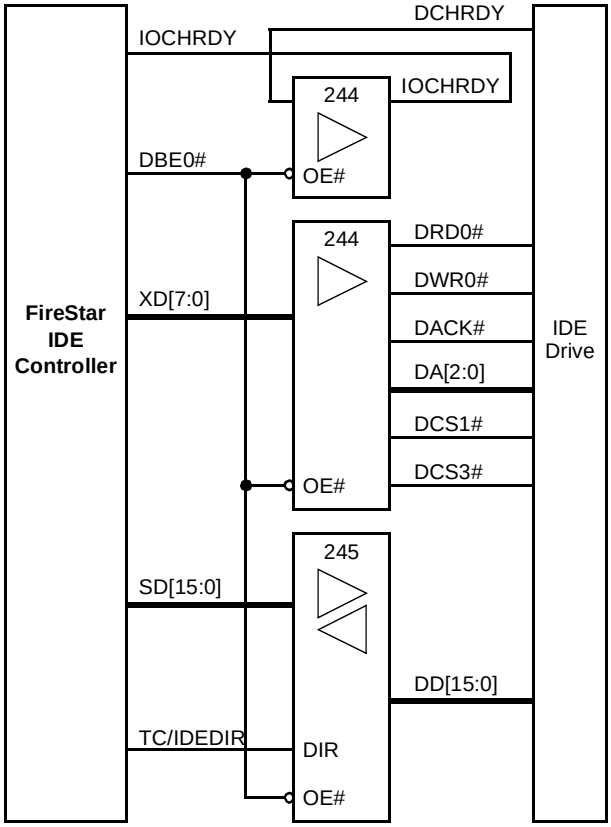

Figure 4-3 IDE Interface Using Zero-TTL

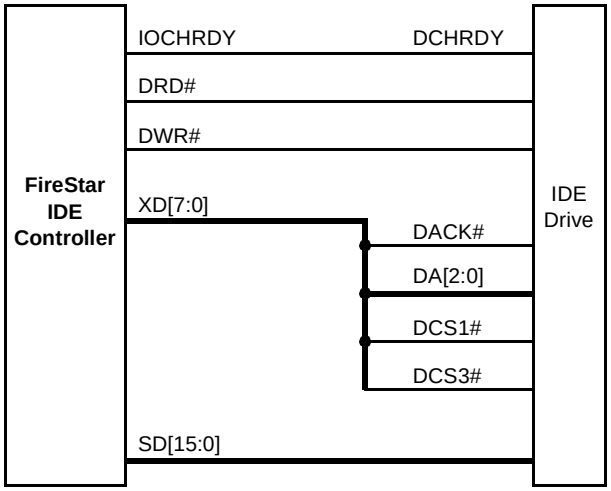

Figure 4-3, *IDE Interface Using Zero-TTL*, shows an implementation for a minimal system without separately buffered drives. A typical notebook design with few ISA-bus devices could use this approach. Note that PIO pins have been assigned IDE control functions DRD# and DWR# to allow a zero-TTL solution, yet some of the control signals still come from the XD[7:0] bus. The X-bus control lines will also toggle during cycles to the ROM, RTC, and KBC but will not have an effect on the IDE drive since DRD# and DWR# are inactive. If this situation is not acceptable and there are enough PIO pins free, all IDE control signals can be assigned to dedicated pins. Table 4-3 list the general IDE control line assignment.

Table 4-3 General IDE Control Line Assignment

Primary Pin Name	IDE Signal	Description
SD[15:0]	DD[15:0]	IDE data bus
XD7	DCS3#	IDE chip select for 3F6-7h or 376-7h I/O access
XD6	DCS1#	IDE chip select for 1F0-7h or 170-7h I/O access
XD5	DDACK#	Bus master IDE DMA acknowledge
XD4	DA2	IDE address
XD3	DA1	
XD2	DA0	
XD1	DRD#	IDE drive read command line, qualified by DBE#
XD0	DWR#	IDE drive write command line, qualified by DBE#
Dedicated pin	DBE0#	Command buffer enable to IDE cable 0
Dedicated pin	DDRQ0	Bus mastering IDE drive DMA request line for cable 0
PIO pin	DBE1#	Command buffer enable to IDE cable 1
PIO pin	DDRQ1	Bus mastering IDE drive DMA request line for cable 1
TC	IDEDIR	Direction control for the IDE buffers.[a]

a. Should be used if UltraDMA is being used.

4.8.2 Programming the IDE Controller

The IDE controller has four register spaces that control it:

1. SYSCFG - SYSCFG registers are accessed by writing Port 022h with an index and writing or reading from Port 024h with a data value.
2. PCIIDE - The PCIIDE space is accessed through PCI Configuration Mechanism #1 by addressing Bus #0, Device #14h, Function #0.
3. IDE I/O - The IDE I/O space is a register set that is hidden behind the IDE I/O ports, and is normally not accessible. A special sequence must be followed for enabling/disabling access to these registers. Unless otherwise noted, all references to IDE I/O space in this section pertain to this hidden space. These configuration registers share the I/O ports.
4. Bus Master IDE registers - Mapped to system I/O space.

References to the IDE I/O space 1F0h-1F7h are used below. The same concepts apply to the 170h-177h space.

4.8.2.1 Enabling Access to IDE I/O Space

To enable access to the IDE I/O register space, the following procedure must be followed:

- Perform two consecutive 16-bit reads from I/O Port 1F1h. This operation makes the register space accessible for the next I/O operation.
- Perform an 8-bit write to I/O Port 1F2h with a value of 03h. This programming keeps the registers accessible indefinitely.

4.8.2.2 Disabling Access to IDE I/O Space

After enabling and programming the IDE I/O registers, these registers must be hidden from standard access before IDE operations can begin. Two options are available:

- Write Port 1F2h with a value of C3h to disable the IDE I/O register space and fully enable IDE operation, and also prevent any future access to this space until the next hardware reset.
- Write Port 1F2h with a value of 83h to disable the IDE I/O space and fully enable IDE operation, but leave open the future possibility of accessing this space by enabling the space again as previously described in Section 4.8.2.1, "Enabling Access to IDE I/O Space".

Table 4-4 shows the registers associated with enabling and disabling access to the IDE I/O space.

Table 4-4 Enabling/Disabling Access to IDE I/O Space Registers

7	6	5	4	3	2	1	0
I/O Address 1F1h			**Write Cycle Timing Register - Timing 0**(1)				**Default = xxh**
Write pulse width: The value programmed in this register plus one determines the DWR# pulse width in PCICLKs (for a 16-bit write from the IDE Data Register). See Table 4-9 or Table 4-10. (Default = xxxx)				Write recovery time: The value programmed in this register plus two determines the recovery time between the end of DWR# and the next DA[2:0]/DCSx# being presented (after a 16-bit write from the IDE Data Register), measured in PCICLKs. See Table 4-9 or Table 4-10. (Default = xxxx)			
(1) Timing 0 can be programmed only if IDE I/O 1F6h[0] = 0. The timing programmed into this register is applied for IDE accesses to drives as selected by 1F3h[3:2] and 1F3h[7].							
I/O Address 1F1h			**Write Cycle Timing Register - Timing 1**(1)				**Default = xxh**
Write pulse width: The value programmed in this register plus one determines the DWR# pulse width in PCICLKs (for a 16-bit write from the IDE Data Register). See Table 4-9 or Table 4-10. (Default = xxxx)				Write recovery time: The value programmed in this register plus two determines the recovery time between the end of DWR# and the next DA[2:0]/DCSx# being presented (after a 16-bit write from the IDE Data Register), measured in PCICLKs. See Table 4-9 or Table 4-10. (Default = xxxx)			
(1) Timing 1 can be programmed only if IDE I/O 1F6h[0] = 1. The timing programmed into this register is applied for IDE accesses to drives as selected by 1F3h[3:2] and 1F3h[7].							

Table 4-4 Enabling/Disabling Access to IDE I/O Space Registers (cont.)

7	6	5	4	3	2	1	0
I/O Address 1F2h			**Internal ID Register**				**Default = xxh**
Configuration disable (WO): 0 = Enable accesses to internal IDE controller registers 1 = Disable accesses to internal IDE controller registers until another 2 consecutive I/O reads from 1F1h. (Default = 1)	Configuration off (WO): 0 = Enable accesses to internal IDE controller registers 1 = Disable all accesses to internal IDE controller registers until power-down or reset.	Reserved (RO): Write to 0. (Default = xxxx)				Reserved: Must be written 11. If not, all writes to the IDE I/O Registers will be blocked.	

4.8.2.3 Setting up the IDE Controller

The steps described below must be followed prior to initializing the timing for the drives, for both PIO and bus mastering capability.

1. Configure the PCI IDE module as PCI Device #14h, Function #0, by setting SYSCFG ADh[4] = 0.
2. Set the PCI bus frequency in IDE I/O 1F5h[0].
3. The 32-byte read prefetch FIFO should be enabled at PCIIDE 40h[5].
4. Concurrent refresh and IDE cycles should be enabled at PCIDV1 52h[0].
5. PCI IDE one wait state reads for primary and secondary channels should be enabled at IDE I/O Register 1F3h[4].
6. Read prefetch for primary and secondary channels should be enabled at IDE I/O Register 1F6h[6].
7. Enable master capability at PCIIDE 04h[2].
8. Assign a non-conflicting I/O address for bus master IDE base address in PCIIDE 20h-23h. The I/O address must be less than 64KB.

Table 4-5 shows the register bits used for setting up the IDE controller.

Table 4-5 IDE Interface Control Registers

7	6	5	4	3	2	1	0
SYSCFG ADh			**Feature Control Register 3**				**Default = 00h**
			PCIIDE responds as: 0 = Device 14h, Function 0 1 = Device 01h, Function 1				
I/O Address 1F5h			**Strap Register**				**Default = xxh**
							PCI CLK speed: 0 = 33MHz 1 = 25MHz

Table 4-5 IDE Interface Control Registers (cont.)

7	6	5	4	3	2	1	0
PCIIDE 40h			**IDE Initialization Control Register**				**Default = 00h**
		Enhanced Slave: 0 = 82C621A-compatible mode, uses a 16-byte FIFO in PIO Mode 1 = Enhanced mode, uses a 32-byte FIFO in PIO Mode		Secondary IDE: 0 = Enable 1 = Disable This bit is effective only if PCIDV1 4Fh[6] = 1.			
PCIDV1 52h			**Misc. Controller Register 3**				**Default = 00h**
							Concurrent refresh and IDE cycle: 0 = Disable 1 = Enable ISA devices that rely on accurate refresh addresses for proper operation should disable this bit.
I/O Address 1F3h			**Control Register**				**Default = xxh**
			Enable one wait state read: 0 = 2 WS minimum 1 = 1 WS minimum for data reads				
I/O Address 1F6h			**Miscellaneous Register**				**Default = xxh**
	Read prefetch: 0 = Disable 1 = Enable						

Table 4-5 IDE Interface Control Registers (cont.)

7	6	5	4	3	2	1	0
PCIIDE 04h			**Command Register - Byte 0**				**Default = 45h**
					IDE controller becomes a PCI master to generate PCI accesses: 0 = Disable 1 = Enable		
PCIIDE 20h-23h			**Bus Master IDE Base Address Register**				**Default = 00000001h**
This register is the I/O base address indicator for the Bus Master IDE Registers. The address block has a size of 16 bytes. - Bits [3:0] are read-only and default to 0001. - Bits [31:4] are writable.							

4.8.3 Programming Timing Information

The FireStar IDE controller of supports up to four IDE drives on two cables with independent timing requirements. After common or independent timing for all the drives is programmed, the IDE controller core tracks application software accesses to the IDE ports and automatically enables the programmed independent timing for the drive being accessed. Figure 4-4, *PIO Mode Configuration*, shows the configuration for the IDE controller while operating in PIO Mode. Figure 4-5, *PIO Mode Cycle Timing*, depicts the timing parameters associated with PIO Mode drives.

A variety of options exist for programming the IDE timing for different drives. It is possible to program common PIO mode timing for all detected drives, customize independent timing for each drive, or enable bus mastering support on a drive-by-drive basis. Follow either Section 4.8.3.1, "Enabling Common Timing for All Drives", or Section 4.8.3.2, "Enabling Independent Timing", to setup global timing or independent timing information for the drives.

Figure 4-4 PIO Mode Configuration

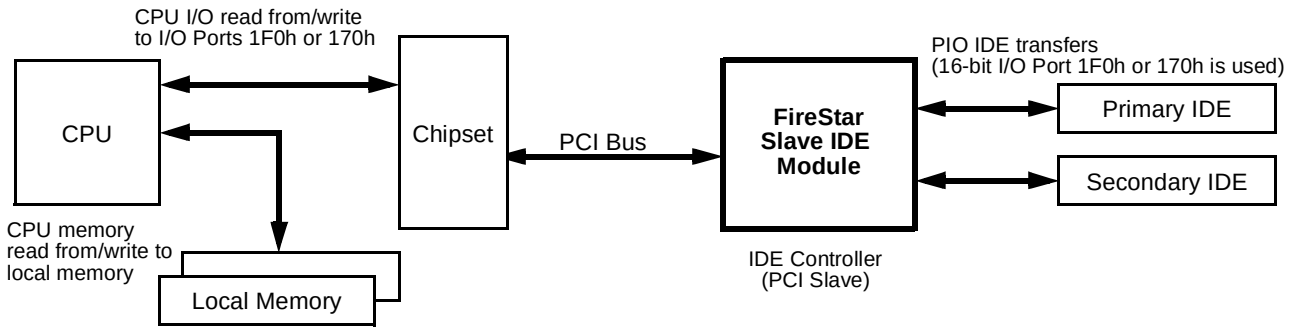

Figure 4-5 PIO Mode Cycle Timing

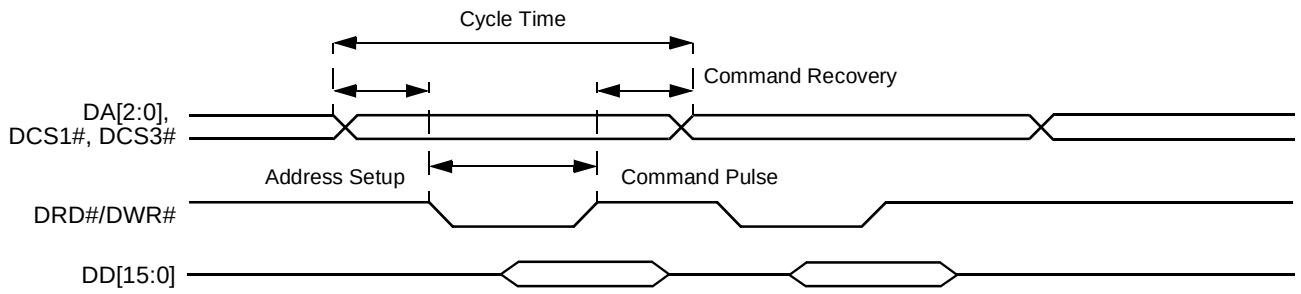

4.8.3.1 Enabling Common Timing for All Drives

Table 4-6 shows the registers associated with programming common timing for all enabled drives. Common IDE timing for all drives is enabled by the IDE controller until independent timing is programmed.

The default common timing for all drives is PIO Mode 0. Common PIO Modes 0-3 timing for all enabled drives can be programmed by setting PCIIDE 40h[1:0].

To enable common PIO Mode 4 or Mode 5 timing, first ensure that PIO Mode 3 is set up in PCIIDE 40h[1:0], as described above. Subsequently, the appropriate bits in PCI-IDE 43h[7:0] can be set to enable Mode 4 or Mode 5 timing.

Table 4-6 IDE Timing Control "Common Timing"

7	6	5	4	3	2	1	0
PCIIDE 40h			**IDE Initialization Control Register**				**Default = 00h**
						Mode: These bits control the default 16-bit cycle times for all IDE devices and can be overridden by programming the IDE I/O Registers. 00 = ≥ 600ns cycle time (PIO Mode 0) 01 = ≥ 383ns cycle time (PIO Mode 2) 10 = ≥ 240ns cycle time (PIO Mode 1) 11 = ≥ 180ns cycle time (PIO Mode 3) These bits are effective only if PCIDV1 4Fh[6] = 1.	

Table 4-6 IDE Timing Control "Common Timing" (cont.)

7	6	5	4	3	2	1	0
PCIIDE 43h			**IDE Enhanced Mode Register**				**Default = 00h**
Enhanced Mode for Drive 1 on Secondary Channel: Sets 16-bit cycle times for IDE PIO Modes 3 and 4 or Multi-Word DMA Modes 1 and 2. 00 = Disabled, control by corresponding Timing Registers Set 01 = PIO Mode 3 or Multi-Word DMA Mode 1, command inactive for 2 PCICLKs 10 = PIO Mode 4 or Multi-Word DMA Mode 2, command inactive for 1 PCICLK 11 = Reserved Corresponding 170h/171h[3:0] must be set to 0 before these two bits are set to 01 or 10.		Enhanced Mode for Drive 0 on Secondary Channel: Sets 16-bit cycle times for IDE PIO Modes 3 and 4 or Multi-Word DMA Modes 1 and 2. 00 = Disabled, control by corresponding Timing Registers Set 01 = PIO Mode 3 or Multi-Word DMA Mode 1, command inactive for 2 PCICLKs 10 = PIO Mode 4 or Multi-Word DMA Mode 2, command inactive for 1 PCICLK 11 = Reserved Corresponding 170h/171h[3:0] must be set to 0 before these two bits are set to 01 or 10.		Enhanced Mode for Drive 1 on Primary Channel: Sets 16-bit cycle times for IDE PIO Modes 3 and 4 or Multi-Word DMA Modes 1 and 2. 00 = Disabled, control by corresponding Timing Registers Set 01 = PIO Mode 3 or Multi-Word DMA Mode 1, command inactive for 2 PCICLKs 10 = PIO Mode 4 or Multi-Word DMA Mode 2, command inactive for 1 PCICLK 11 = Reserved Corresponding 1F0h/1F1h[3:0] must be set to 0 before these two bits are set to 01 or 10.		Enhanced Mode for Drive 0 on Primary Channel Sets 16-bit cycle times for IDE PIO Modes 3 and 4 or Multi-Word DMA mode 1 and 2. 00 = Disabled, control by corresponding Timing Registers Set 01 = PIO Mode 3 or Multi-Word DMA Mode 1, command inactive for 2 PCICLKs 10 = PIO Mode 4 or Multi-Word DMA Mode 2, command inactive for 1 PCICLK 11 = Reserved Corresponding 1F0h/1F1h[3:0] must be set to 0 before these two bits are set to 01 or 10.		

4.8.3.2 Enabling Independent Timing

If required, independent timing can be programmed for each drive in each channel, by accessing the IDE I/O register space. For every enabled drive, three timing choices are available: the common timing described earlier, Timing 0 or Timing 1. Timing 0 and Timing 1 are two sets of timing that provide separate read/write pulse widths, read/write recovery times, common address setup time, and common channel ready hold times. The relevant timing registers for the primary channel are listed in Table 4-7.

Table 4-7 IDE Timing Control "Independent Timing"

7	6	5	4	3	2	1	0
I/O Address 1F0h			**Read Cycle Timing Register - Timing 0**(1)				**Default = xxh**
Read pulse width: The value programmed in this register plus one determines the DRD# pulse width in PCICLKs (for a 16-bit read from the IDE Data Register). See Table 4-9 or Table 4-10. (Default = xxxx)				Read recovery time: The value programmed in this register plus two determines the recovery time between the end of DRD# and the next DA[2:0]/DCSx# being presented (after a 16-bit read from the IDE Data Register), measured in PCICLKs. See Table 4-9 or Table 4-10. (Default = xxxx)			
(1) Timing 0 can be programmed only if IDE I/O 1F6h[0] = 0. The timing programmed into this register is applied for IDE accesses to drives as selected by 1F3h[3:2] and 1F3h[7].							
I/O Address 1F0h			**Read Cycle Timing Register - Timing 1**(1)				**Default = xxh**
Read pulse width: The value programmed in this register plus one determines the DRD# pulse width in PCICLKs (for a 16-bit read from the IDE Data Register). See Table 4-9 or Table 4-10. (Default = xxxx)				Read recovery time: The value programmed in this register plus two determines the recovery time between the end of DRD# and the next DA[2:0]/DCSx# being presented (after a 16-bit read from the IDE Data Register), measured in PCICLKs. See Table 4-9 or Table 4-10. (Default = xxxx)			
(1) Timing 1 can be programmed only if IDE I/O 1F6h[0] = 1. The timing programmed into this register is applied for IDE accesses to drives as selected by 1F3h[3:2] and 1F3h[7].							

Table 4-7 IDE Timing Control "Independent Timing" (cont.)

7	6	5	4	3	2	1	0
I/O Address 1F1h			**Write Cycle Timing Register - Timing 0**(1)				**Default = xxh**
Write pulse width: The value programmed in this register plus one determines the DWR# pulse width in PCICLKs (for a 16-bit write from the IDE Data Register). See Table 4-9 or Table 4-10. (Default = xxxx)				Write recovery time: The value programmed in this register plus two determines the recovery time between the end of DWR# and the next DA[2:0]/DCSx# being presented (after a 16-bit write from the IDE Data Register), measured in PCICLKs. See Table 4-9 or Table 4-10. (Default = xxxx)			
(1) Timing 0 can be programmed only if IDE I/O 1F6h[0] = 0. The timing programmed into this register is applied for IDE accesses to drives as selected by 1F3h[3:2] and 1F3h[7].							
I/O Address 1F1h			**Write Cycle Timing Register - Timing 1**(1)				**Default = xxh**
Write pulse width: The value programmed in this register plus one determines the DWR# pulse width in PCICLKs (for a 16-bit write from the IDE Data Register). See Table 4-9 or Table 4-10. (Default = xxxx)				Write recovery time: The value programmed in this register plus two determines the recovery time between the end of DWR# and the next DA[2:0]/DCSx# being presented (after a 16-bit write from the IDE Data Register), measured in PCICLKs. See Table 4-9 or Table 4-10. (Default = xxxx)			
(1) Timing 1 can be programmed only if IDE I/O 1F6h[0] = 1. The timing programmed into this register is applied for IDE accesses to drives as selected by 1F3h[3:2] and 1F3h[7].							
Note: Both Timing 0 and Timing 1 sets share the same address setup and DRDY delay times as programmed in 1F6h[5:4] and 1F6h[3:2].							
I/O Address 1F3h			**Control Register**				**Default = xxh**
Timing register value select: 0 = Basic 1 = Enhanced				Drive 1 timing select: Basic (1F3h[7] = 0): 0 = Determined by PCIIDE 40h[1:0] 1 = Timing 1 Enhanced (1F3h[7] = 1): 0 = Timing 1 1 = Timing 0	Drive 0 timing select: Basic (1F3h[7] = 0): 0 = Determined by PCIIDE 40h[1:0] 1 = Timing 1 Enhanced (1F3h[7] = 1): 0 = Timing 1 1 = Timing 0		
Note: Bits 2, 3 and 7 of the Control Register should be enabled after the Cycle Timing Registers and Miscellaneous Register are programmed. See Table 4-8 for programming options.							
I/O Address 1F6h			**Miscellaneous Register**				**Default = xxh**
		Address setup time:(1) The value programmed in this register plus one determines the address setup time between DRD# or DWR# going active and DA[2:0], DCS3#, DCS1# being presented, measured in PCI-CLKs. See Table 4-9 or Table 4-10. (Default = xx)		Delay:(1) The value programmed in this register plus two determines the minimum number of PCICLKs between DRDY# going high and DRD# or DWR# going inactive. See Table 4-9 or Table 4-10. (Default = xxx)			Timing register load select: 0 = Timing 0 (1F0-1F1h accept Timing 0 values) 1 = Timing 1 (1F0-1F1h accept Timing 1 values)
(1) Both Timing 0 and Timing 1 sets have common address setup and DRDY delay times as programmed in 1F6h[5:2].							

Setting up independent timing for drives is a two step process. The first step is to load the timing information sets (common, Timing 0, Timing 1). The second step is to associate each drive with one of the preloaded timing sets. Figure 4-6, *IDE Interface Primary Channel Programming Flow Chart*, is a flow chart that describes how to program the drives of the primary channel of the IDE interface with independent timing requirements, for the configuration recommended in Table 4-8. For the secondary channel, a similar procedure can be followed by changing all the indexes from 1Fxh to 17xh, and programming PCIIDE 43h[7:4].

Figure 4-6 IDE Interface Primary Channel Programming Flow Chart

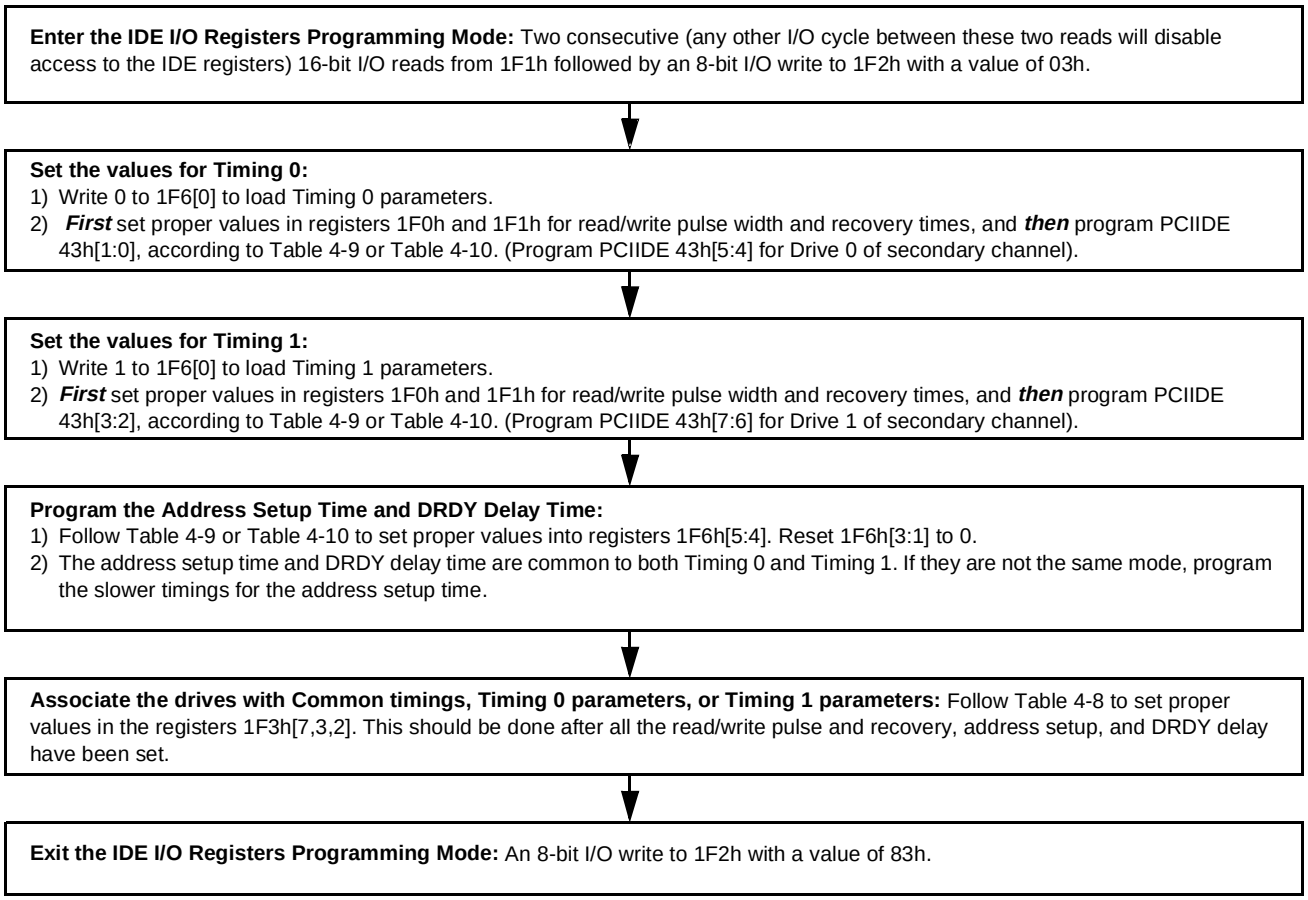

4.8.3.3 Loading Timing 0 and Timing 1 sets:

The parameters for Timing 0 are programmed by first setting IDE I/O 1F6h[0] = 0, followed by initializing IDE I/O 1F0h and 1F1h with the first set of read/write pulse widths and read/write recovery times. The parameters for Timing 1 are programmed by first setting IDE I/O 1F6h[0] = 1, followed by initializing IDE I/O 1F0h and 1F1h with a second set of read/write pulse widths and read/write recovery times.

Address setup time and channel ready hold time (DRDY) are common to both timing sets and are programmed in 1F6h[5:4] and 1F6h[3:1] respectively. Refer to Table 4-9 and Table 4-10 for information regarding the values that need to be programmed in the timing registers for different modes.

4.8.3.4 Associating drives with timing sets:

Each enabled drive can be associated with one of the preloaded timings according to Table 4-8, by programming IDE I/O registers 1F3h[7] and 1F3h[3:2] (these ***must*** be programmed after setting up the timing sets. For every enabled drive, the IDE controller allows two basic choices for timing control, “Basic”, or “Enhanced”, depending on the value of IDE I/O register 1F3h[7].

“Basic” choices (IDE I/O 1F3h[7] = 0):

1. The “common” timings as described in Section 4.8.3.1, "Enabling Common Timing for All Drives", where timing for all drives is determined by PCIIDE 40h[1:0] (Modes 0-3), or PCIIDE 43h[7:0] (Modes 4-5).

2. Timing 0

"Enhanced" choices (IDE I/O 1F3h[7] = 1):

1. Timing 0.
2. Timing 1.

Table 4-9 and Table 4-10 show the timing and recommended register settings for various IDE modes defined in the Enhanced IDE Specifications. They include PIO transfer, Single-Word DMA transfer, and Multi-Word DMA transfer modes. The actual cycle time equals the sum of actual command active time and actual command inactive (command recovery and address setup) time. These three timing requirements should be met. In some cases, the minimum cycle time requirement is greater than the sum of the command pulse and command recovery time. This means either the command active (command pulse) or command inactive time (command recovery and address setup) can be lengthened to ensure that the minimum cycle times are met.

Table 4-8 Independent Timing Selection Options for Primary Channel

Drive 1 Timing	Drive 0 Timing	1F3h[7]	1F3h[3]	1F3h[2]
Common(1)	Common(1)	0	0	0
Common(1)	Timing 0	0	0	1
Timing 0	Common(1)	0	1	0
Timing 0	Timing 0	0	1	1
Timing 1	Timing 1	1	0	0
Timing 1(2)	Timing 0	1	0	1
Timing 0	Timing 1	1	1	0
Timing 0	Timing 0	1	1	1

(1) Refer to PCIIDE 40h[1:0] for common timing values if PCIDV1 4Fh[6] = 1.

(2) Recommended configuration.

Table 4-9 16-Bit Timing Parameters with 33MHz PCI Bus

Parameter: Register Bits	Dimension	IDE Transfer Modes										
		PIO Modes					Multi-Word DMA Modes			Single-Word DMA Modes		
		0	1	2	3	4	0	1	2	0	1	2
R/W Command Pulse: 1F0h/170h/1F1h/ 171h[7:4], Index-0/1	Bit values in hex	5	4	3	2	2	7	2	2	F	8	4
	Timing in PCICLKs(1)	6	5	4	3	3	8	3	3	16	9	5
	Enhanced IDE Spec in ns(2)	165	125	100	80	70	215	80	70	480	240	120
R/W Recovery Time: 1F0h/170h/1F1h/ 171h[3:0], Index-0/1	Bit values in hex	9	4	0	0	0	6	0	0	D	4	0
	Timing in PCICLKs(1)	11	6	2	1	0	8	1	0	15	6	2
	Enhanced IDE Spec in ns(2)	N/S	N/S	N/S	70	25	215	50	25	N/S	N/S	N/S
Address Setup: 1F6h/176h[5:4]	Bit values in hex	2	1	1	1	0	0	0	0	0	0	0
	Timing in PCICLKs(1)	3	2	2	2	1	1	1	1	1	1	1
	Enhanced IDE Spec in ns(2)	70	50	30	30	25	N/A	N/A	N/A	N/A	N/A	N/A
DRDY: 1F6h/176h[3:1]	Bit values in hex	0	0	0	0	0	0	0	0	0	0	0
	Timing in PCICLKs(1)	2	2	2	2	2	2	2	2	2	2	2
Enhanced Mode:(3) PCIIDE 43h bits [7:6], [5:4], [3:2], or [1:0]	Bit values in hex	0	0	0	1	2	0	1	2	0	0	0

Parameter: Register Bits	Dimension	IDE Transfer Modes										
		PIO Modes					Multi-Word DMA Modes			Single-Word DMA Modes		
		0	1	2	3	4	0	1	2	0	1	2
Cycle Time	Timing in PCICLKs	20	13	8	6	5	17	5	4	32	16	8
	Enhanced IDE Spec in ns(2)	600	383	240	180	120	480	150	120	960	480	240

N/S = Not Specified, N/A = Not Applicable
(1) The actual timing (in PCICLKs) that will be generated by the IDE controller if the recommended bit values in hex are programmed.
(2) The timing (in ns) as specified in the Enhanced IDE Specification.
(3) PCIIDE 43h can be programmed only after the R/W command pulse, and R/W recovery times are programmed.

Table 4-10 16-Bit Timing Parameters with 25MHz PCI Bus

Parameter: Register Bits	Dimension	IDE Transfer Modes										
		PIO Modes					Multi-Word DMA Modes			Single-Word DMA Modes		
		0	1	2	3	4	0	1	2	0	1	2
R/W Command Pulse: 1F0h/170h/1F1h/ 171h[7:4], Index-0/1	Bit values in hex	4	3	2	2	1	5	2	1	D	6	3
	Timing in PCICLKs(1)	5	4	3	3	2	6	3	2	13	7	4
	Enhanced IDE Spec in ns(2)	165	125	100	80	70	215	80	70	480	240	120
R/W Recovery Time: 1F0h/170h/1F1h/ 171h[3:0], Index-0/1	Bit values in hex	6	2	0	0	0	4	0	0	8	2	0
	Timing in PCICLKs(1)	8	4	2	1	0	6	1	0	10	4	1
	Enhanced IDE Spec in ns(2)	N/S	N/S	N/S	70	25	215	50	25	N/S	N/S	N/S
Address Setup: 1F6h/176h[5:4]	Bit values in hex	1	1	0	0	0	0	0	0	0	0	0
	Timing in PCICLKs(1)	2	2	1	1	1	1	1	1	1	1	1
	Enhanced IDE Spec in ns(2)	70	50	30	30	25	N/A	N/A	N/A	N/A	N/A	N/A
DRDY: 1F6h/176h[3:1]	Bit values in hex	0	0	0	0	0	0	0	0	0	0	0
	Timing in PCICLKs(1)	2	2	2	2	2	2	2	2	2	2	2
Enhanced Mode:(3) PCIIDE 43h bits [7:6], [5:4], [3:2], or [1:0]	Bit values in hex	0	0	0	1	2	0	1	2	0	0	1
Cycle Time	Timing in PCICLKs	15	10	6	5	4	13	4	3	24	12	6
	Enhanced IDE Spec in ns(2)	600	383	240	180	120	480	150	120	960	480	240

N/S = Not Specified, N/A = Not Applicable
(1) Actual timing (in PCICLKs) that will be generated by the MIDE Module if the recommended bit values in hex are programmed.
(2) Timing (in ns) as specified in the Enhanced IDE Specification.
(3) PCIIDE 43h can be programmed only after the R/W command pulse, and R/W recovery times are programmed.

4.8.3.5 Programming and Drive Placement Tips:

1. Ensure that IDE I/O Register 1F6[0] (176h[0] in the secondary channel) is set to 0 whenever accessing Timing Set 0. It is a common mistake that after accessing Timing Set 0, this bit is not reset to 0 by the BIOS. These bits will not be reset during a soft reset. After a soft reset, if the BIOS reloads Timing 0 and

Timing 1 Sets, it would actually load the Timing 1 Set twice.

2. The address setup and recovery time are shared by the two IDE devices on the same channel at 1F6h[5:1]. If these two devices are not in the same mode, slower address setup and recovery time should be programmed to ensure proper timings on the slower drive. Under this assumption, two drives should be placed on the separate channels in a two-drive system. In a multiple-drive system, place slower drives on one channel and faster drives on the other channel.
3. If no IDE hard drives are in the primary slave, secondary master location or slave location, set only the command pulse and recovery time (1F0h/1F1h, Index-1, 170h/171h, Index-0 and 170h/171h, Index-1) to correspond to PIO Mode 0. This is to ensure proper timing for an ATAPI CD-ROM that may be in any of these locations.
4. If no device is present in the primary slave (Drive 1) location, set the command pulse and recovery time (1F0h and 1F1h, Timing 0 to correspond to PIO Mode 0. Also, if no drive is present in the secondary master (Drive 0), or secondary slave (Drive 1) location, set the command pulse and recovery time (170h-171h for Timing 0), and (170h-171h for Timing 1) to correspond to Mode 0. These registers do not default to a fixed value.

4.8.4 Bus Mastering Support Overview

FireStar provides a full function PCI local bus IDE controller capable of programmed I/O (PIO) mode or master mode operation. The chipset is capable of arbitrating for the ownership of the PCI local bus and transfers data between the IDE device and local memory. The IDE controller in FireStar conforms to the ATA Standard for IDE disk controllers.

By performing the IDE data transfers as a bus master instead of a slave, the chipset off-loads the CPU from having to perform the transfers. This benefit is realized in the form of the CPU not having to perform programmed I/O transfers to effect the data transfer between the disk and the memory. Figure 4-7, *Master IDE Configuration*, shows the configuration for a bus mastering IDE controller. Figures 4-8 and 4-9 depict the timing parameters associated with Multi-Word and Single-Word DMA transfers.

The master mode of operation is an extension to the standard IDE controller model. Thus, systems can still revert back to slave mode IDE if they so desire. The master mode of operation is designed to work with any IDE device that supports DMA transfers on the IDE bus. Devices that do not support DMA on the IDE bus can transfer IDE data using programmed I/O.

Figure 4-7 Master IDE Configuration

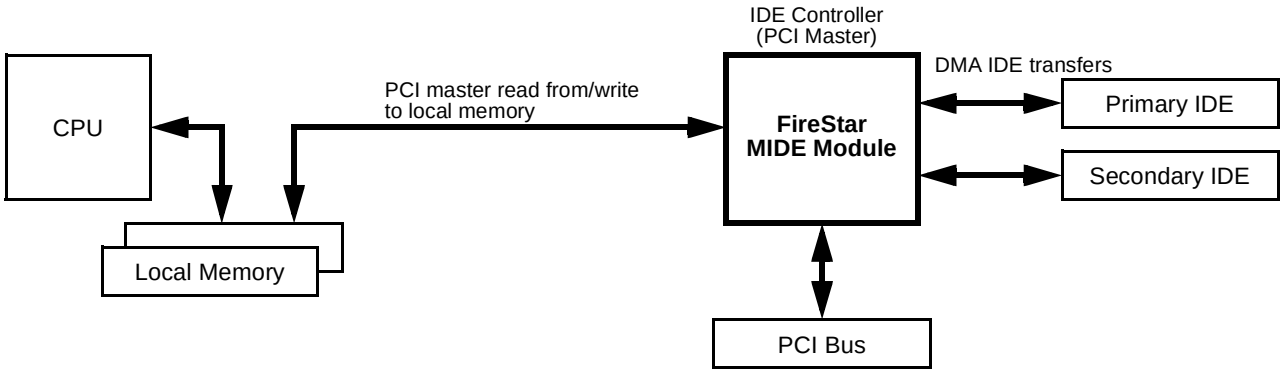

Figure 4-8 Multi-Word DMA Transfer Mode

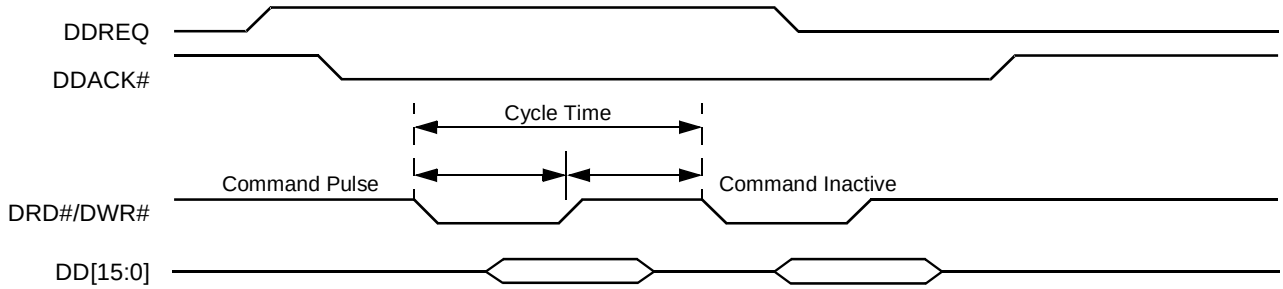

Figure 4-9 Single-Word DMA Transfer Mode

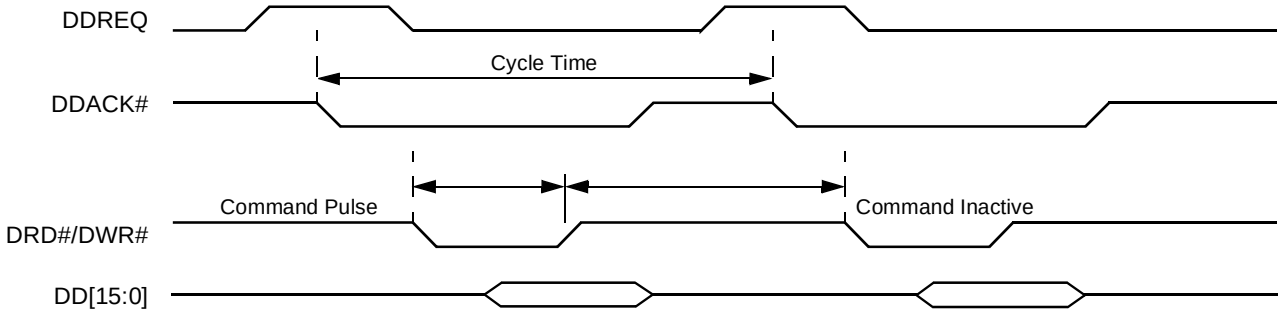

4.8.5 Physical Region Descriptor Table

Before the IDE controller starts a master transfer it is given a pointer to a Physical Region Descriptor Table. This table contains some number of Physical Region Descriptors (PRDs) which describe areas of memory that are involved in the data transfer. The descriptor table must be aligned on a 4-byte boundary and the table cannot cross a 64K boundary in memory.

4.8.5.1 Physical Region Descriptor

The physical memory region to be transferred is described by a Physical Region Descriptor (PRD). The data transfer will proceed until all the regions described by the PRDs in the table have been transferred. The format of a PRD table is shown in Table 4-11.

Each Physical Region Descriptor entry is eight bytes in length:

- The first four bytes specify the start address of a physical memory region.
- The next two bytes specify the size of the region in bytes (64K byte limit per region). A value of zero in these two bytes indicates 64K.
- Bit 7 of the last byte indicates the end of the table; bus master operation terminates when the end of the table has been reached.

Refer to Figure 4-10, *Physical Region Descriptor Table Entry*, for the correlation between PRD table entries and memory regions that are involved in DMA data transfers.

The memory region specified by the PRD cannot straddle a 64Kbyte boundary. Also, the total sum of the PRD byte counts must be equal to or greater than the size of the disk transfer request.

Table 4-11 Physical Region Descriptor Table Entry

Bit(s)	Name	Default	Function
Byte-0, bit 0	---	0	0 (RO)
Byte-[3:1] Byte-0, bits [7:1]	BASE	xxxx xxxx	Memory Region Physical Base Address [31:1]
Byte-4, bit 0	---	0	0 (RO)

Bit(s)	Name	Default	Function
Byte-5 Byte-4, bits [7:1]	COUNT	xxxx	Byte Count [15:1]
Byte-6	---	xx	Reserved
Byte-7, bits [6:0]	---	xx	Reserved
Byte-7, bit 7	EOT	x	End of Table

Note: The memory region specified by the descriptor is further restricted such that the region cannot straddle a 64K boundary. This means the byte count is limited to 64K and the incrementer for the current address register only extends from bit 1 to bit 15.

Figure 4-10 Physical Region Descriptor Table Entry

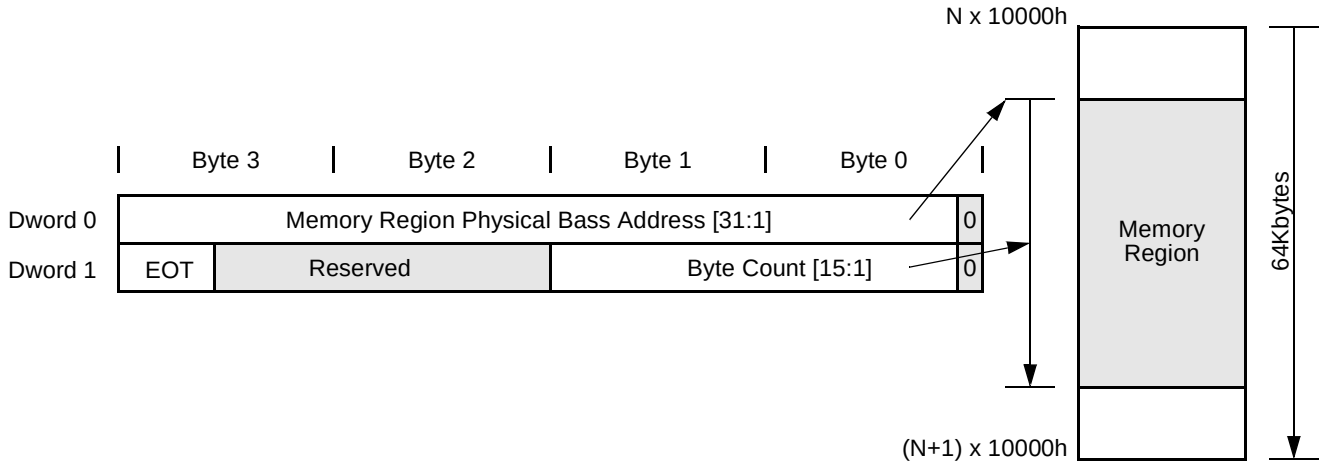

4.8.5.2 Bus Master IDE Registers

The bus master IDE function uses 16 bytes of I/O space. The base address of this block of I/O space is pointed to by the Bus Master IDE Base Address Register and PCIIDE 20h-23h. All bus master IDE I/O space registers can be accessed as byte, word, or dword quantities. The description of the 16 bytes of I/O registers is shown in Table 4-12 (refer to Section 5.4.3, "Bus Master IDE Registers" in the original FireStar ACPI Preliminary Data Book (PN: 912-2000-015 Rev 1.0, dated February 28, 1997, page 345) for individual bit formats in each register).

Table 4-12 Bus Master IDE Registers

Offset from Base Address	Register Access	Register Name/Function
00h	R/W	Bus Master IDE Command Register for Primary IDE
01h		Device-specific
02h	RWC	Bus Master IDE Status Register for Primary IDE
03h		Device-specific
04h-07h	R/W	Bus Master IDE PRD Table Address for Primary IDE
08h	R/W	Bus Master IDE Command Register for Secondary IDE
09h		Device-specific
0Ah	RWC	Bus Master IDE status Register for Secondary IDE
0Bh		Device-specific
0Ch-0Fh	R/W	Bus Master IDE PRD Table Address for Secondary IDE

4.8.5.3 Standard Programming Sequence for Bus Mastering Operations

DMA Mode capability can be programmed independently for primary and secondary channels by setting the bus mastering registers 02h and 0Ah. Ensure that PIO Mode 3 is set up in PCIIDE 40h[1:0], as described in Section 4.8.3.1, "Enabling Common Timing for All Drives". Subsequently, the appropriate bits in PCIIDE 43h[7:0] can be set to enable DMA Mode 1 or DMA Mode 2.

Table 4-13 DMA Mode Programming Bits

7	6	5	4	3	2	1	0
Base Address + 02h		**Bus Master IDE Status Register for Primary IDE**					**Default = 00h**
	Drive 1 DMA capable: This bit is set by device-dependent code (BIOS or device driver) to indicate that Drive 1 for this channel is capable of DMA transfers, and that the controller has been initialized for optimum performance.	Drive 0 DMA capable: This bit is set by device-dependent code (BIOS or device driver) to indicate that Drive 0 for this channel is capable of DMA transfers, and that the controller has been initialized for optimum performance.					
Base Address + 0Ah		**Bus Master IDE Status Register for Secondary IDE**					**Default = 00h**
	Drive 1 DMA Capable: This bit is set by device dependent code (BIOS or device driver) to indicate that Drive 1 for this channel is capable of DMA transfers, and that the controller has been initialized for optimum performance.	Drive 0 DMA Capable: This bit is set by device dependent code (BIOS or device driver) to indicate that Drive 0 for this channel is capable of DMA transfers and that the controller has been initialized for optimum performance.					

To initiate a bus master transfer between memory and an IDE DMA slave device, the following steps are required (Figure 4-11, *Bus Master IDE Operation*, shows the bus master operations described below):

1. DOS calls BIOS (INT13H) to start a disk transfer. For OS that is not using BIOS services, a device driver should be in place to intercept the disk access request.
2. BIOS (or device driver) prepares a PRD Table in the system memory. Each PRD is 8 bytes long. It consists of an address pointer (the location specifies in the ES:BXh) to the starting address and the transfer count (the sector count specifies in the AL) of the memory buffer to be transferred. If the data area (as pointed by ES:BXh and AL) crosses a 64K boundary, the BIOS (or device driver) would have to break it into multiple

transfers (PRDs) so that each of them lies within the boundary.

3. BIOS (or device driver) provides the starting address of the PRD Table by loading the PRD Table Pointer Register (Bus Master IDE Base Address + 04h or + 0Ch).
4. The direction of the data transfer is specified by setting the Read/write Control bit in the Command Register (Bus Master IDE Base Address + 00h or + 08h). Clear the Interrupt bit and Error bit in the Status Register (Bus Master IDE Base Address + 02h or + 0Ah).
5. BIOS (device driver) resets the Hard Disk Task Complete Flag (a memory byte location at 40:E8h) to 00h. It will be in a tight loop checking whether this Complete Flag is set to FFh. Other OS may have a different mechanism to detect disk activity.
6. BIOS (or device driver) specifies address and size of the data request by programming the Command Block Registers of the IDE device and issues the appropriate DMA transfer command to it.
7. BIOS (device driver) engages the bus master function by writing ‘1’ to the Start bit in the Command Register (Bus Master IDE Base Address + 00h and + 08h) for the appropriate channel.
8. The 82C700 starts reading the first PRD and transfers data to/from its 32-byte FIFO in response to DMA requests (IDEREQx) from the IDE devices. The 82C700 then starts transfer to local memory (an internal master request will be generated) for read if the FIFO is empty, for write if the FIFO is full, or when the byte count expires and no more entries in the PRD.
9. After the last data transfer within a PRD, the 82C700 checks the End of Table (EOT) bit to decide whether to read another PRD or move forward.
10. At the end of transfer, the IDE device signals an interrupt.
11. After 82C700 has flushed all the data from its FIFO to system memory, it resets the Bus Master IDE Active bit and sets the Interrupt bit in the Status Register.
12. The disk interrupt (DINTx) will be passed to the internal INTC (‘8259). DINTx will not be blocked to the INTC in a disk write operation. This DINTx triggers IRQ14 or IRQ15 and eventually goes to interrupt the CPU.
13. CPU generates an INTA# cycle in responds to the IRQ14 (INT76H) or IRQ15 (INT77H). The INT76H handler sets 40:E8h to FFh to signal completion of the disk access.
14. BIOS (device driver) resets the Start/Stop bit in the Command Register. It then reads the Status and Interrupt bits in the Status Register and then the IDE device’s status to determine if the transfer completed successfully.
15. Status will be passed back to INT13H to finish the operation.

Figure 4-11 Bus Master IDE Operation

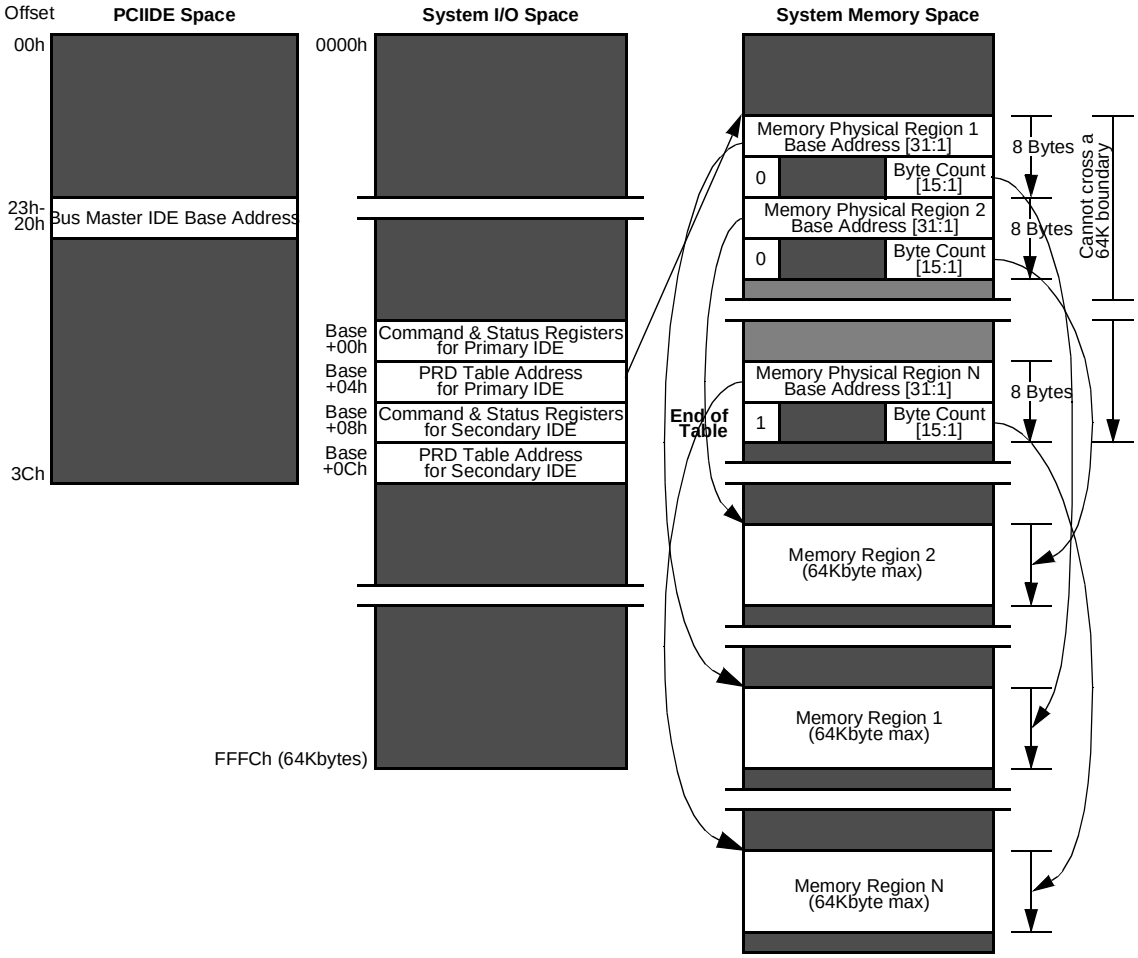

4.8.5.4 Programming the IDE Interrupt Routing

Table 4-14 details the interrupt routing mechanism for the MIDE Module while in the Legacy and Native Modes. The system BIOS needs to program them accordingly.

Table 4-14 IDE Interrupt Routing Chart

Functions		PCI IDE Configuration Register Setting				IDE Drive Interrupts routed to:	
IDE Modes		04h[0]	40h[3]	40h[2]	09h[3:0]	Primary	Secondary
Primary	Secondary	IDE I/O Enable	2nd IDE Disable	Native Mode Enable	Native/ Legacy Mode	8259 Interrupt or PCI Interrupt	8259 Interrupt or PCI Interrupt
Disabled		0	x	x	xxxx	N/A	N/A
Legacy(1)	Disabled	1	1	0	xxxx	8259 IRQ14 input	N/A
		1	1	1	xx10		
Native	Disabled	1	1	1	xx11	PCIRQ3#(2)	N/A
Legacy(1)	Native	1	0	1	1110	8259 IRQ14 input	PCIRQ3#(2)

Functions		PCI IDE Configuration Register Setting				IDE Drive Interrupts routed to:	
IDE Modes		04h[0]	40h[3]	40h[2]	09h[3:0]	Primary	Secondary
Native	Legacy(1)	1	0	1	1011	PCIRQ3#(2)	8259 IRQ15 input
Legacy(1)	Legacy(1)	1	0	0	xxxx	8259 IRQ14 input	8259 IRQ15 input
		1	0	1	1010		
Native	Native	1	0	1	1111	PCIRQ3#(2)	PCIRQ3#(2)

(1) The 8259 interrupt input IRQ14 (IRQ15) will not be available for mapping from PCIIRQ0#-3# if the primary (secondary) channel is enabled in legacy mode.

(2) See Table 4-15 for selection possibilities.

Table 4-15 IDE Interrupt Selection Registers

7	6	5	4	3	2	1	0
PCIIDE 45h			**IDE Interrupt Selection Register**				**Default = 00h**
Secondary Drive 1 interrupt pin: 00 = IRQ10+PCIRQ0# 01 = IRQ11+PCIRQ1# 10 = IRQ14+PCIRQ2# 11 = IRQ15+PCIRQ3#		Secondary Drive 0 interrupt pin: 00 = IRQ10+PCIRQ0# 01 = IRQ11+PCIRQ1# 10 = IRQ14+PCIRQ2# 11 = IRQ15+PCIRQ3#		Primary Drive 1 interrupt pin: 00 = IRQ10+PCIRQ0# 01 = IRQ11+PCIRQ1# 10 = IRQ14+PCIRQ2# 11 = IRQ15+PCIRQ3#		Primary Drive 0 interrupt pin: 00 = IRQ10+PCIRQ0# 01 = IRQ11+PCIRQ1# 10 = IRQ14+PCIRQ2# 11 = IRQ15+PCIRQ3#	
Note: ISA IRQ is selected for Legacy Mode and PCI IRQ is selected for Native Mode (see PCIIDE 09h).							
PCIIDE 47h - FS ACPI Version			**IDE Interrupt Selection Register**				**Default = FAh**
Secondary Drive 1 interrupt pin: 00 = IRQ10+PCIRQ0# 01 = IRQ11+PCIRQ1# 10 = IRQ14+PCIRQ2# 11 = IRQ15+PCIRQ3#		Secondary Drive 0 interrupt pin: 00 = IRQ10+PCIRQ0# 01 = IRQ11+PCIRQ1# 10 = IRQ14+PCIRQ2# 11 = IRQ15+PCIRQ3#		Primary Drive 1 interrupt pin: 00 = IRQ10+PCIRQ0# 01 = IRQ11+PCIRQ1# 10 = IRQ14+PCIRQ2# 11 = IRQ15+PCIRQ3#		Primary Drive 0 interrupt pin: 00 = IRQ10+PCIRQ0# 01 = IRQ11+PCIRQ1# 10 = IRQ14+PCIRQ2# 11 = IRQ15+PCIRQ3#	
Note: ISA IRQ is selected for Legacy Mode and PCI IRQ is selected for Native Mode (see PCIIDE 09h).							

4.8.6 UltraDMA Mode Implementation

It is assumed that the reader has a fair understanding of the Ultra DMA 33 protocol. Only the implementation on FireStar Plus is covered in this note.

Procedure for setting up the hard disk system in Ultra DMA mode

1. Check whether the IDE Drives support the Ultra DMA mode.
2. If yes, then set up the prerequisites (as explained below)
3. Set up the chipset in Ultra DMA mode to respond to the DMARQ from the IDE Drive.
4. Setup the Drive in Ultra DMA mode.
5. Issue DMA read/write commands for the actual Data transfer from/to the drive.

The procedure in detail:

To check for Ultra DMA capability of the Drive

Issue an Identify command to the Drive.

For this,

Write

00h	(or anything else) to Features reg	1f1 (171 for secondary)
00h	(or anything else) to Sec. Count reg	1f2 (172 for secondary)
00h	(or anything else) to Sec. No. reg	1f3 (173 for secondary)
00h	(or anything else) to Cyl. Low reg	1f4 (174 for secondary)

00h	(or anything else) to Cyl High reg	1f5 (175 for secondary)
A0h	to Device/head reg (for master)	1f6 (176 for secondary)
	B0h to Device/head reg (for slave)	1f6 (176 for secondary)
ECh	to Command reg	1f7 (177 for secondary)

After the execution of this command, if DRDY in status reg. 1F7 (177 for secondary) reads 1, then 255 16 bit words can be read from the data port 1f0 (170 for secondary). If bit 2 in word 53 is set, then the device will support Ultra DMA and the values reported in word 88 are valid. The definition of the contents of word 88 are as follows:

15	14	13	12	11	10	9	8
Reserved					Ultra DMA Mode 2 Status 0 = Not active 1 = Active	Ultra DMA Mode 1 Status 0 = Not active 1 = Active	Ultra DMA Mode 0 Status 0 = Not active 1 = Active
7	**6**	**5**	**4**	**3**	**2**	**1**	**0**
Reserved					Ultra DMA-Mode 2 Support 0 = No 1 = Yes	Ultra DMA-Mode 1 Support 0 = No 1 = Yes	Ultra DMA-Mode 0 Support 0 = No 1 = Yes

Depending on these parameters, the BIOS/Device driver should enable the appropriate mode of operation.

4.8.6.1 Prerequisites

- The system has to be running at 66 Mhz (CPU clock, FS clock).
- For Ultra DMA to work properly, the following features of the chipset should be enabled.
- IDE write concurrency
- ISA bus preemption
- Arbiter support for PCI/IDE concurrency
- Concurrent PCI master IDE and IDE cycle
- X-1-1-1 MIDE rd/wr transfers
- For this, set PCIIDE Reg. 42 = 56h

Most of these are prerequisites for Disk DMA transfer.

To setup the chipset in Ultra DMA mode for the Primary Channel Master Drive (Follow an equivalent process for other drives)

Set PCIIDE 44h bit 0. This enables the Ultra DMA controller.

For setting the mode of transfer, set PCIIDE 44h bits 5 and 4 as follows:

00	for mode 0
01	for mode 1
10	for mode 2

These bits control the write timings of the Ultra DMA commands.

To setup the Drive in Ultra DMA mode Issue the set features command to the Drive. For this, write

03h	to Features reg	1f1 (171 for secondary)
4xh	to Sec. Count reg	1f2 (172 for secondary)
	x = 0 for mode 0 1 for mode 1 2 for mode 2	
00h	(or anything else) to Sec. No. reg	1f3 (173 for secondary)
00h	(or anything else) to Cyl. Low reg	1f4 (174 for secondary)
00h	(or anything else) to Cyl High reg	1f5 (175 for secondary)
A0h	to Device/head reg (for master)	1f6 (176 for secondary)
	B0h to Device/head reg (for slave)	1f6 (176 for secondary)
EFh	to Command reg	1f7 (177 for secondary)

Check whether the command was successful by testing the DRDY (bit 6) and ERR (bit 0) bits in the Status register and the ABRT bit (bit 2) in the error register 1f1 (171 in case of secondary). If successful, the drive is in Ultra DMA mode, and can respond to commands Read DMA or write DMA using Ultra DMA protocol.

4.8.6.2 Special Note:

1. PIO modes can coexist with Ultra DMA modes, but not Disk DMA.
2. The default Bus Master drivers could work with Ultra DMA setup externally, only if the driver does not do a set features command for multiword DMA to override the setup done externally.

4.8.6.3 Observations and Waveforms

Figure 4-12 Ultra DMA Mode 0 Read, Command width = 120 ns

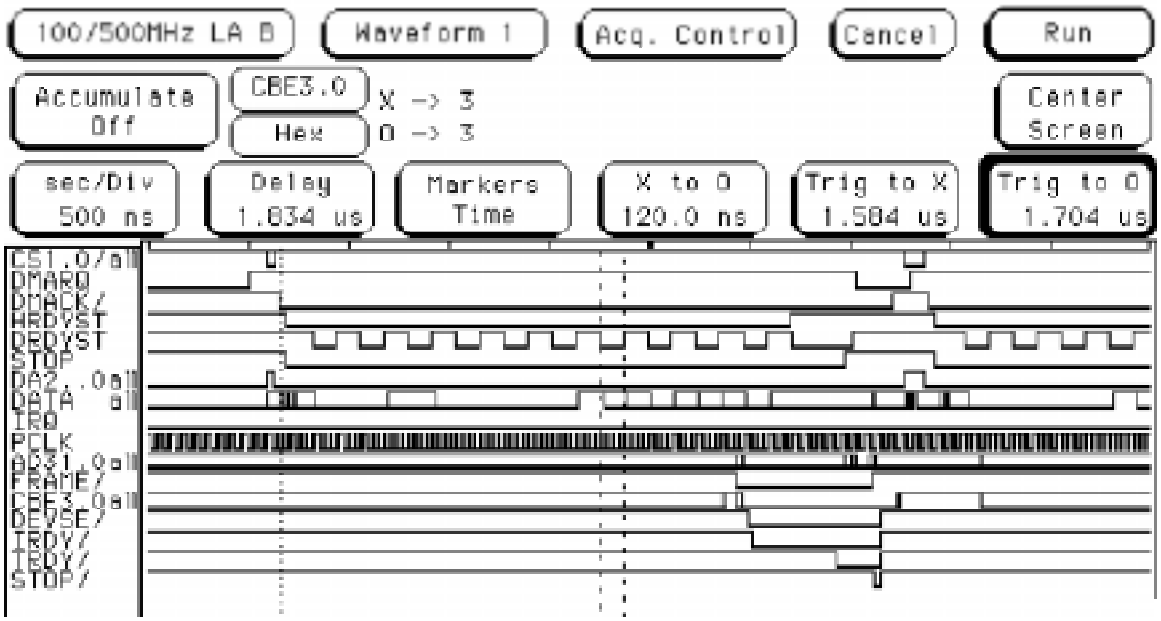

Figure 4-13 Ultra DMA mode 0 write

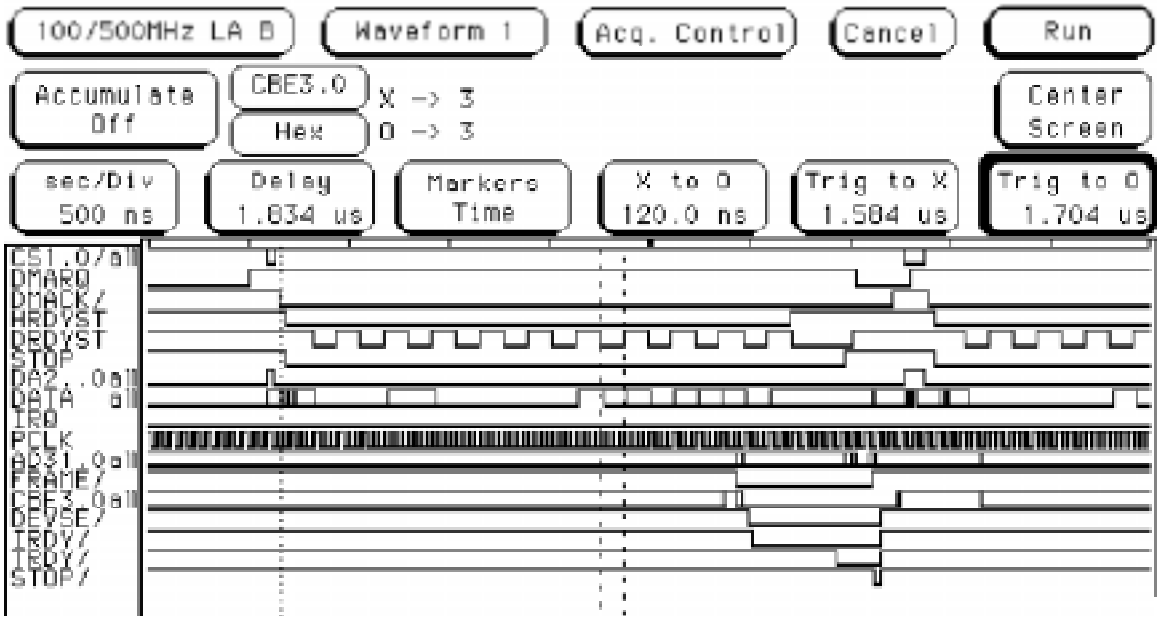

Figure 4-14 Ultra DMA Mode 1 Read, Command width = 80ns

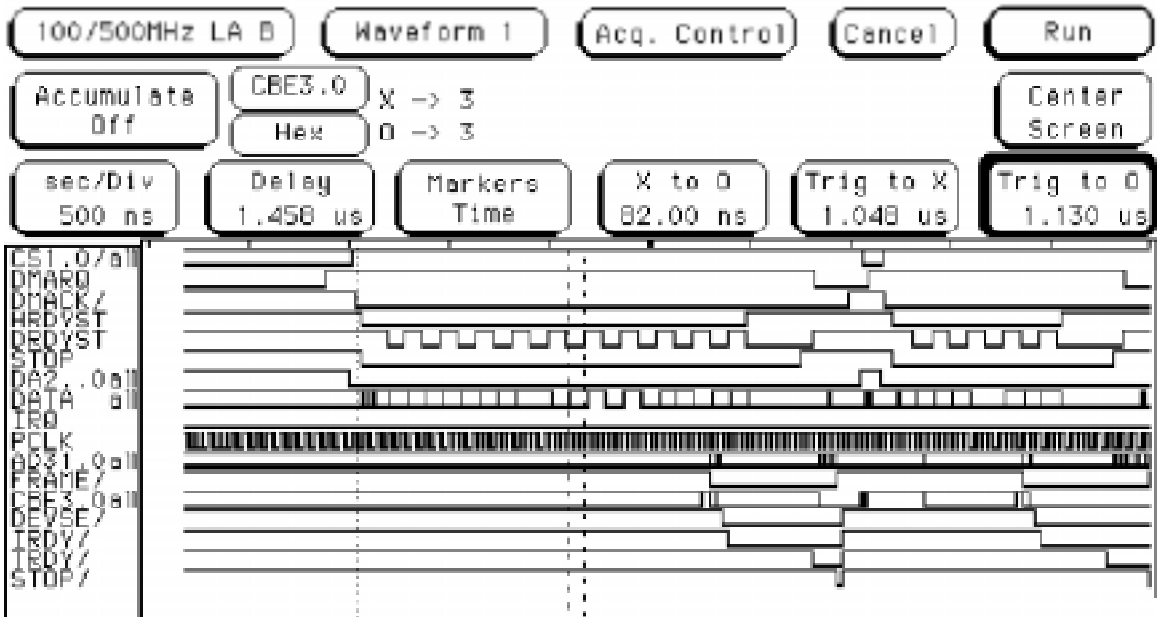

Figure 4-15 Ultra DMA mode 1 write

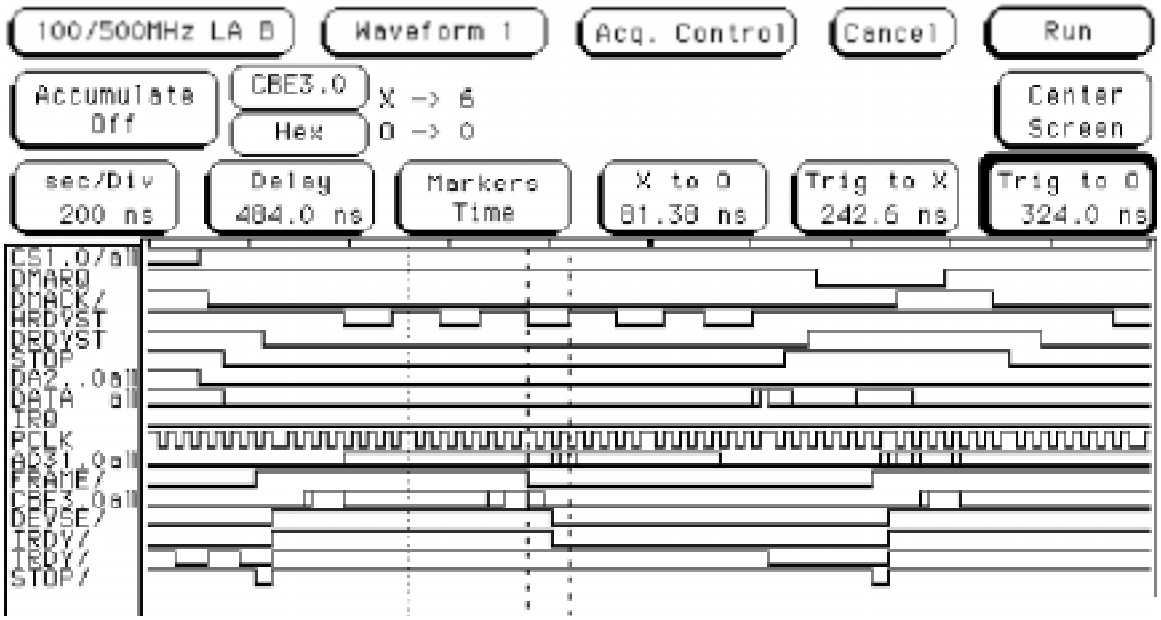

Figure 4-16 Ultra DMA mode 2 read, Command width = 60ns

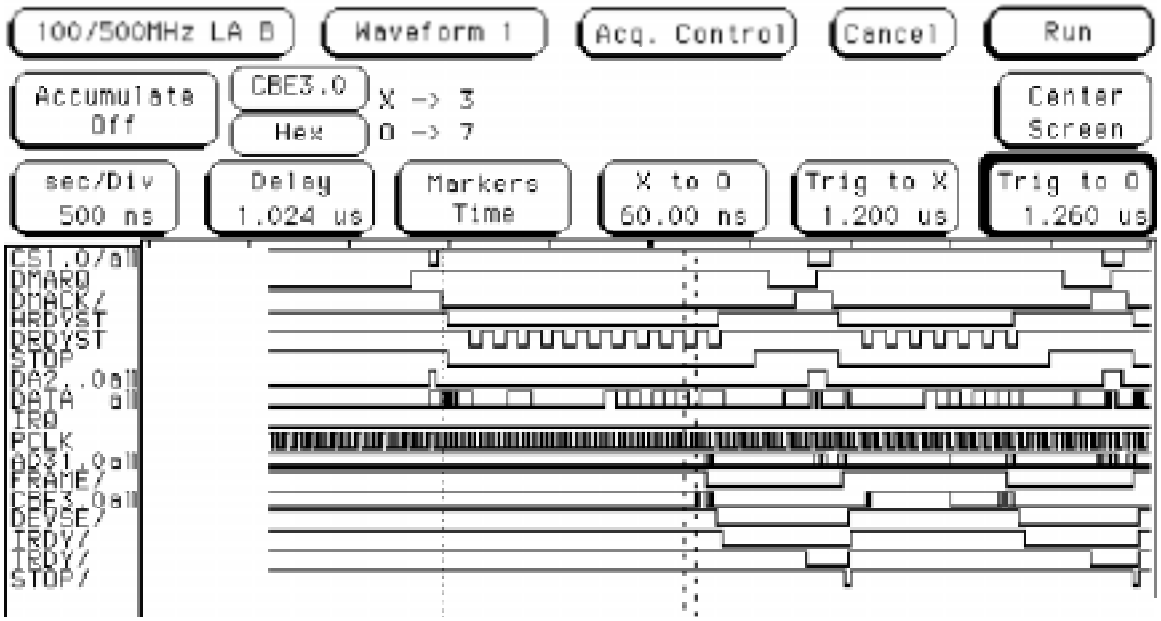

Figure 4-17 Ultra DMA mode 2 write

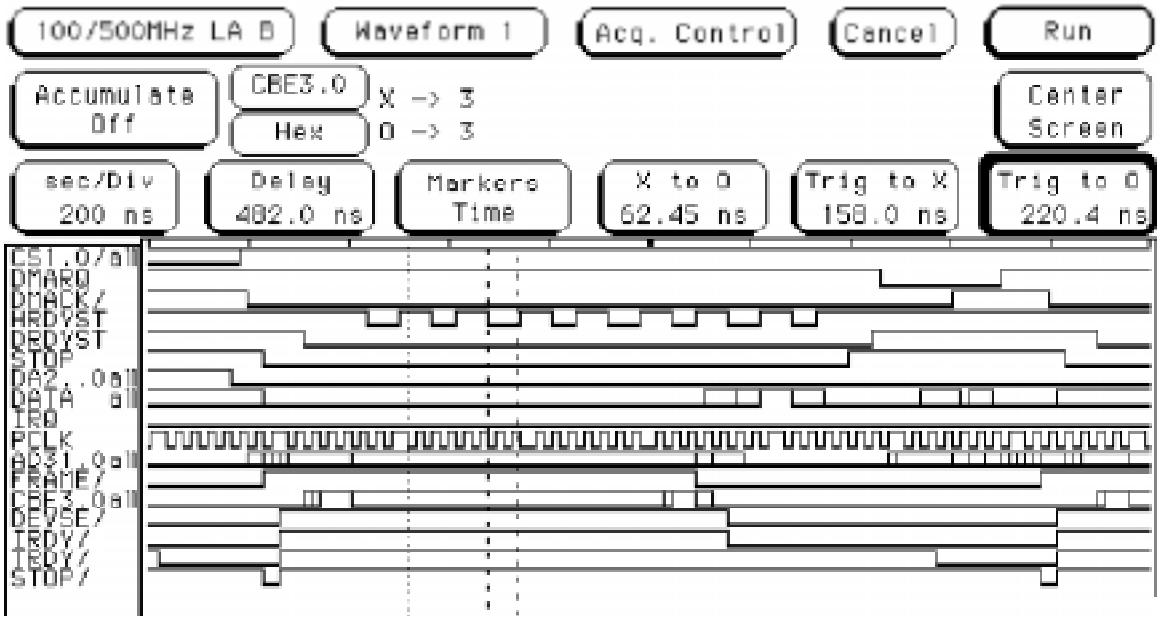

4.8.7 Emulated Bus Mastering Mode

FireStar provides a means to have DMA-type operation on a PIO mode drive. Any IDE device can use this feature. The feature works by acting as a bus master, in much the same way as the DMA controller would.

Emulated bus mastering allows devices such as IDE CD-ROM drives to access data and store it in a memory buffer with no CPU intervention. The interrupt from the IDE drive is handled by a hardware sequencer; the CPU is interrupted only after the transfer is complete. The attached IDE drive can deassert IOCHRDY as needed if data is not ready.

Since the purpose of the Emulated Bus Master IDE mode is primarily to increase system performance during the disk read from CD-ROM transfer, this mode is implemented for the read-from-disk direction only.

The differences between PIO mode and DMA mode transfer are not only the control signal behavior, but also the programming methods to the drive and IDE controller. These are described below. It is important to note that **no DMA instructions are allowed** to be sent to the drive in this mode, since the drive itself is a PIO-mode-only device. No interception of drive-related commands takes place, so DMA-related commands would only confuse the IDE drive logic.

4.8.7.1 Setup

The IDE controller channel must be programmed to support a bus master IDE drive. In addition, the bit corresponding to the channel must be set in PCIIDE 44h[3:0] for FireStar and PCI-IDE 46h[3:0] for FireStar ACPI to select Emulated Bus Mastering (refer to Table 4-16).

4.8.7.2 Operation

As stated earlier, only PIO-mode commands are allowed to the drive. The emulated bus mastering function automates only reads from the drive, so writes must still be carried out through normal I/O write cycles from the CPU.

Emulated bus mastering depends on the IRQ line to determine transfer completion. For CD-ROM data read, IRQ is asserted for two reasons:

- When data is ready to be read by host (“data ready IRQ”)
- At the end of the transfer (“transfer complete IRQ”).

This behavior is important to understand for the emulation implementation.

Data Ready IRQ: When IRQ assertion signals “data ready”, software must act as if it is programming a DMA mode IDE controller by doing the following:

- Prepare the required PRD table and word count in memory
- Generate required control commands to the IDE controller. Since the drive used is not DMA-capable, software must not send any DMA commands to the disk drive. Only normal PIO commands can be used.
- Set the Start bit in the IDE controller register.

At this point the hardware takes over and generates the programmed number of I/O read cycles to the CD-ROM drive. During the transfer, the IDE controller uses the existing bus master IDE control state machine and logic to perform the operation. The signal DCS1# is forced active, DCS3# is forced inactive, and DDACK# is masked, before being sent to

the disk drive interface. Therefore, the CD-ROM is seeing PIO mode data read transfer control.

Transfer Complete IRQ: When the word count expires in the IDE controller and CD-ROM drive, IRQ is asserted to signal “transfer completed”. Software must:

- Reset the Start bit in the IDE controller register
- Read the controller status and then the drive status to determine whether the transfer completed successfully.

Table 4-16 Emulated Bus Master Control Registers

7	6	5	4	3	2	1	0
PCIIDE 44h			**Emulated Bus Master Register**				**Default = 00h**
Reserved				Emulated bus mastering for Cable 1, Drive 1: 0 = Disable 1 = Enable	Emulated bus mastering for Cable 1, Drive 0: 0 = Disable 1 = Enable	Emulated bus mastering for Cable 0, Drive 1: 0 = Disable 1 = Enable	Emulated bus mastering for Cable 0, Drive 0: 0 = Disable 1 = Enable
PCIIDE 46h - FS ACPI Version			**Emulated IDE Configuration Register**				**Default = 00h**
Fix for I/O 32-bit Mode 4 and Mode 5 timing: 0 = Disable 1 = Enable	Reserved			Emulated bus mastering for Cable 1, Drive 1: 0 = Disable 1 = Enable	Emulated bus mastering for Cable 1, Drive 0: 0 = Disable 1 = Enable	Emulated bus mastering for Cable 0, Drive 1: 0 = Disable 1 = Enable	Emulated bus mastering for Cable 0, Drive 0: 0 = Disable 1 = Enable

5.0 PIR Table for FireStar Plus

This section describes the OPTi-recommended means of supporting the Microsoft IRQ miniport function for FireStar. Microsoft has already incorporated this support into Memphis starting from build 15xxyy. All future Memphis versions will therefore incorporate support according to the scheme presented below. The IRQ miniport drivers for OSR2 are available as a QFE on the OPTi website.

5.1 Overview

In the Microsoft-defined $PIR table, there is an entry for each slot that is organized as shown below. The Link value is OEM-specific. The complete table format can be found on the Microsoft webwite (file name PCIIRQ.HTM).

Byte Offset	Name
0	PCI Bus Number
1	PCI Device Number (in upper 5 bits)
2	Link value for INTA#
3-4	IRQ bitmap for INTA#
5	Link value for INTB#
6-7	IRQ bitmap for INTB#
8	Link value for INTC#
9-10	IRQ bitmap for INTC#
11	Link value for INTD#
12-13	IRQ bitmap for INTD#
14	Slot Number
15	Reserved

Because OPTi chipsets are so flexible as regards PCI interrupt possibilities, there are unlimited combinations that could be used in any system. However, a single Miniport driver must be able to route interrupts for all cases.

OPTi is proposing a common scheme for all BIOS vendors to use for this Link value that will allow Microsoft Windows and other OSes to perform dynamic IRQ routing for PCI devices regardless of how the system has been designed.

5.2 OPTi PCI Interrupt Source Overview

There are four sources of PCI interrupts in an OPTi-based system.

- ISA IRQs converted to PCI interrupts - FireStar has eight ISA interrupt pins, IRQA, B, C, D, E, F, G, and H, each of which can be mapped to any IRQ line. The conversion to PCI-type interrupt is very simple: there is an edge/level bit in the IRQ routing register for each pin. The routing registers are located at PCIDV1 B0h-B7h.
- PIO pins programmed as PCIRQ# pins - FireStar has 32 PIO pins, any of which can be programmed to become PCIRQ0#, PCIRQ1#, PCIRQ2#, or PCIRQ3#. Once the assignment has been made (by BIOS), the routing of each PCIRQ# pin to an ISA IRQ is controlled by writing a corresponding 4-bit value in PCIDV1 B8h-B9h.
- Docking Station PCIRQ# pins - An OPTi system using an OPTi 82C814 FireBridge Docking Controller (or 82C824 FireFox CardBus Controller in docking mode) also has PCIRQ0#, PCIRQ1#, PCIRQ2#, and PCIRQ3# pins. Once enabled, through PCICFG 48h-4Bh of the 82C814 PCI configuration registers (default is direct-map enabled), their mapping to ISA IRQs is controlled by PCIDV1 B8h-B9h (same as for the PIO pins). Mapping can be 'twisted' if desired for more even interrupt sharing.
- Serial IRQ pin - OPTi systems support the Compaq single-wire IRQSER line. Once serial IRQs are enabled (by BIOS), the PCIRQ# mapping to ISA IRQs is controlled by PCIDV1 B8h-B9h (same as for the PIO pins).

The regular means in which these interrupt controls have been implemented makes it straightforward to implement a unified interrupt router.

5.3 OPTi-Suggested Link Value Scheme

This suggested layout should cover all cases of interrupt assignment both on docking stations and on local devices, no matter what configuration is selected.

5.3.1 Proposed Usage

Name	7	6	5	4	3	2	1	0
$PIR Link Value	Reserved, Write as 0	Register Offset in IRQ Selection Source (REGOFST) - This value is used to compute the location of the PCI Configuration Register used to set this interrupt.			Reserved, Write as 0	IRQ Selection Source 000=No interrupt connection[a] 001=FireStar IRQ pin 010=FireStar PIO pin or Serial IRQ PIRQ# 011=FireBridge 1 INTx# pin 1xx=reserved		

a. If bits [2:0]=00, entire link byte must be set to zero to indicate "no connection."

5.3.2 IRQ Selection Source and Register Offset

These values indicate how the routing registers can be accessed. It works like this.

01=FireStar IRQ pin - There are eight ISA IRQ lines that can be used in the system design as PCI interrupts. These are accessed through PCIDV1 B0-B7h of the FireStar PCI configuration registers, which all have the following format.

Name	7	6	5	4	3	2	1	0
IRQx Intr. Select Reg.	Pulldown setting - please do not alter this bit	Reserved - please do not alter these bits		Interrupt Type 0 = ISA 1 = PCI	Interrupt Selection on this pin 0000=Disabled 0001=IRQ1 0110=IRQ6 1011=IRQ11 0010=rsvd 0111=IRQ7 1100=IRQ12 0011=IRQ3 1000=IRQ8# 1101=rsvd 0100=IRQ4 1001=IRQ9 1110=IRQ14 0101=IRQ5 1010=IRQ10 1111=IRQ15			

Select the desired IRQ mapping by writing its value to PCIDV1 (B0h+REGOFST) bits [0:3], and set bit [4]=1 to select PCI level mode. Avoid changing the value of bit [7], which is design-dependent.

10=FireStar PIO pin or Serial IRQ PIRQ# - There are 32 PIO lines that can be preconfigured by BIOS as PCI PCIRQ0-3#. Also, if Serial IRQs are used, they can provide equivalent PCIRQ# inputs. In both cases, the PCIRQ0-3# lines are internally routed to ISA interrupts through PCIDV1 B8-B9h of the FireStar PCI configuration registers, which have the following format.

PCI DV1	Name	7	6	5	4	3	2	1	0
B8h	PCI Interrupt Selection Register 1	Interrupt Selection on PIO PCIRQ1# input 0000=Disabled 0001=IRQ1 0110=IRQ6 1011=IRQ11 0010=rsvd 0111=IRQ7 1100=IRQ12 0011=IRQ3 1000=IRQ8# 1101=rsvd 0100=IRQ4 1001=IRQ9 1110=IRQ14 0101=IRQ5 1010=IRQ10 1111=IRQ15				Interrupt Selection on PIO PCIRQ0# input 0000=Disabled 0001=IRQ1 0110=IRQ6 1011=IRQ11 0010=rsvd 0111=IRQ7 1100=IRQ12 0011=IRQ3 1000=IRQ8# 1101=rsvd 0100=IRQ4 1001=IRQ9 1110=IRQ14 0101=IRQ5 1010=IRQ10 1111=IRQ15			
B9h	PCI Interrupt Selection Register 2	Interrupt Selection on PIO PCIRQ3# input 0000=Disabled 0001=IRQ1 0110=IRQ6 1011=IRQ11 0010=rsvd 0111=IRQ7 1100=IRQ12 0011=IRQ3 1000=IRQ8# 1101=rsvd 0100=IRQ4 1001=IRQ9 1110=IRQ14 0101=IRQ5 1010=IRQ10 1111=IRQ15				Interrupt Selection on PIO PCIRQ2# input 0000=Disabled 0001=IRQ1 0110=IRQ6 1011=IRQ11 0010=rsvd 0111=IRQ7 1100=IRQ12 0011=IRQ3 1000=IRQ8# 1101=rsvd 0100=IRQ4 1001=IRQ9 1110=IRQ14 0101=IRQ5 1010=IRQ10 1111=IRQ15			

Select the desired IRQ mapping by writing its value *as a nibble* to the 16-bit value at PCIDV1 B8h, *shifted left* by the value in REGOFST times 4 bits. So if the link value connects the slot INTA# to the PIO PCIRQ2# input, its REGOFST value should be 02h (shift the nibble left by two nibbles, 8 bits, within the word at B8h).

Note that a restriction on the first FireStar production silicon inhibits sharing the same interrupt through a redirected ISA IRQ line with one coming into a PIO pin PCIRQ# line. For example, assigning PCIRQ3# as IRQ7 automatically blocks the IRQ coming from the IRQ7 pin, regardless of whether it was programmed as a PCI interrupt or not. This restriction has been removed starting from FireStar ACPI production (please contact OPTi for details if needed).

However, interrupts from PIO pins and from the serial IRQ input are always sharable, on all silicon revisions.

11=FireBridge 1 INTx pin - On any OPTi docking station level, there are four PCI interrupt lines INTA#-INTD# that can be mapped, just like the PIO pins mentioned above, to the PIO PCIRQ0-3# inputs. So when a PCI device is detected on any non zero PCI bus, the same mechanism mentioned above applies.

For further flexibility, the INTA#-INTD# mapping to PCIRQ0#-PCIRQ3# can be switched at the source. PCICFG 48-4Bh

correspond to the INTA#-INTD# inputs on the secondary side of the bridge. Registers 48h-4Bh default to 01-02-03-04 for a direct mapping, but can be rewritten if desired to change the mapping structure. Refer to the 82C814 FireBridge 1 data book for details.

5.3.3 Example of a PCI IRQ routing table:

Given below is an example of a PCI IRQ routing table on an OPTi FireStar evaluation board.

Byte Offset	Size in bytes	Value	Description
0	4	52h,49h,59h,24h	This is the signature $PIR for this table
4	2	01h, 00h	This indicates the major version to be 1 and the minor version to be 0
6	2	00h, 90h	This indicates the table size in a hexadecimal value
8	1	00h	The bus number of the PCI interrupt router
9	1	08h	The device number and function number of the PCI interrupt router. The upper 5 bits indicate the device number and the lower 3 bits indicate the function number
10	2	00h, 00h	No IRQs are devoted exclusively to PCI
12	4	00h, 00h, 00h, 00h	This value indicates that there is no compatible PCI interrupt router that uses the same method for mapping PIRQ# links to IRQs
16	4	00h, 00h, 00h, 00h	No additional information is required for the IRQ miniport driver
20	11	00h	Reserved (set to zero)
31	1	71h	checksum - such that the sum of all the entries in the $PIR table, including the checksum value, modulo 256, is zero
32	1	00h	PCI bus number for 1st "slot"
33	1	28h	Device number of this "slot" - in the upper 5 bits
34	1	51h	Link Value for INTA# - refer to previous explanation of the OPTi Link value encoding scheme
35	2	9Eh, F8h	IRQ bitmap for INTA#. This particular value tells you that you cannot map this PCIIRQ to IRQ14, IRQ13, IRQ8, IRQ2, IRQ1, and IRQ0
37	1	61h	Link Value for INTB#
38	2	9Eh, F8h	IRQ bitmap for INTB#
40	1	71h	Link Value for INTC#
41	2	9Eh, F8h	IRQ bitmap for INTC#
43	1	32h	Link Value for INTD#
44	2	9Eh, F8h	IRQ bitmap for INTD#
46	1	01h	Slot number
47	1	00h	Reserved
Continued Below			

The remaining "slot" link values are given below:

PCI bus#	Device#	LA	IRQ map for INTA	LB	IRQ map for INTB	LC	IRQ map for INTC	LD	IRQ map for INTD	Slot #	Rsvd
00	06	61	9ef8	71	9ef8	32	9ef8	51	9ef8	02	00
00	07	71	9ef8	32	9ef8	51	9ef8	61	9ef8	03	00
00	04	02	9ef8	12	9ef8	22	9ef8	32	9ef8	00	00

PCI bus#	Device#	LA	IRQ map for INTA	LB	IRQ map for INTB	LC	IRQ map for INTC	LD	IRQ map for INTD	Slot #	Rsvd
01	00	02	9ef8	12	9ef8	22	9ef8	32	9ef8	04	00
01	01	12	9ef8	22	9ef8	32	9ef8	02	9ef8	05	00
01	02	22	9ef8	32	9ef8	02	9ef8	12	9ef8	06	00

LA = Link Value for INTA#

LB = Link Value for INTB#

LC = Link Value for INTC#

LD = Link Value for INTD#

Figure 5-1 PCI Interrupts Mapping Matrix

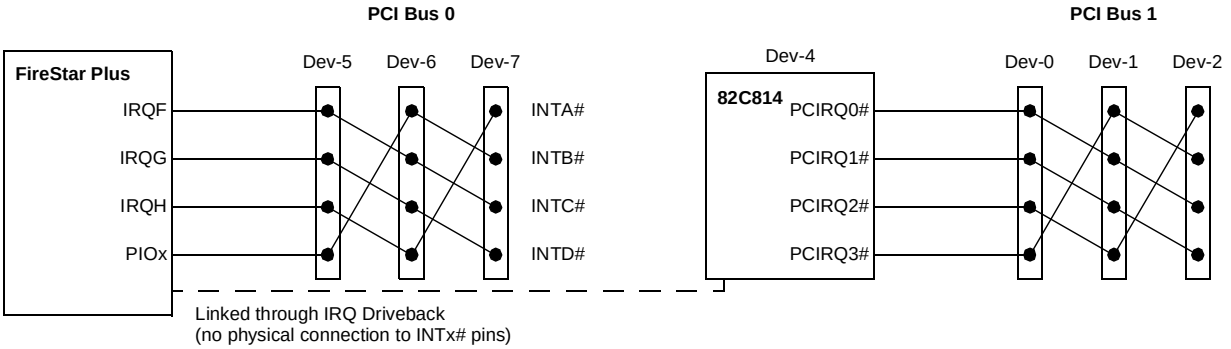

6.0 Interfacing the FireStar Plus Chipset with the 82C602A

The aim of this section is to illustrate how the FireStar Plus chipset can be interfaced with the 82C602A. The connectivity illustrated in this document is one of the ways that the 82C602A can be interfaced to the FireStar Plus chipset.

6.1 Purpose of Using the 82C602A

By utilizing the 82C602A companion chip in it's Viper Notebook Mode A configuration, one gains the following (as opposed to a non 82C602A, FireStar chipset based system):

- 8 power management inputs are now available, muxed in with the DRQs and IRQ8# on the four EPMMUX pins.
- 7 full-featured PIO pins are available on the original DRQ0-7 pins and IRQ8# pin of FireStar.The number of pins is actually 8, but is reduced by 1 because one must be programmed as ATCLK/2.
- 12 PPWR outputs are generated by latching the SD bus lines from PCTLH (FireStar PPWRL) and PCTLL (FireStar RSTDRV).
- An internal RTC. This precludes the need for an external RTC.

The ISA bus RSTDRV signal is now generated by the 82C602A chip, so that the FireStar RSTDRV pin can be used for PPWR generation (power control latch control signal). If the extra PPWR signals are not needed, the FireStar RSTDRV pin becomes useful as a full-featured PIO pin.

6.2 Connectivity

The actual connectivity of the 82C602A is shown on the attached Orcad schematic page. This connectivity is described below.

6.2.1 Strapping the 82C602A

The 82C602A needs to be used in the Viper Notebook Mode A (VNBA). To strap the 82C602A into the VNBA mode, the XD4 and XD0 signals on the 82C602A must be connected to GND via a 4.7K pulldown resistor. The rest of the XD lines need to be pulled up to +5V (10K resistors).

6.2.2 Using the 82C602A Internal RTC

The IRQ8# pin (Pin 56) of the 82C602A is pulled up (to 5V or 3.3V) and not connected anywhere else. The IRQ8# is sent out on the EPMMUX1 output of the 82C602A to the FireStar chipset.

The XD[7:0] bus from FireStar is connected to the SD[7:0] of the 82C602A. The XDIR pin (pin 72) of the 82C602A should be pulled upto 5V.

6.2.3 DREQ# and DACK# Connectivity

The DACK#[2:0] pins from FireStar are configured as EDACK[2:0] outputs, and the rest of the DACK# lines have been configured as EPMMUX[3:0] inputs. The new DACK# utilization has been tabulated below.

Table 6-1 DACK# Encoding

Original Name	New Signal	Decoder Input	Decoder Output
DACK0# (O)	EDACK0 (O)	A	DACK0-7# correspond to decoder outputs Y0-Y7
DACK1# (O)	EDACK1 (O)	B	
DACK2# (O)	EDACK2 (O)	C	

Table 6-2 New DACK# Utilization

Original Name	New Signal	Mux Input	ATCLK/2 (B)	ATCLK (A)	Muxed Signals
DACK3# (O)	EPMMUX0 (I)	C0	0	0	RINGI
		C1	0	1	EPMI2#
		C2	1	0	EPMI3#
		C3	1	1	LLOBAT
DACK5# (O)	EPMMUX1 (I)	C0	0	0	IRQ8#
		C1	0	1	EPMI0#
		C2	1	0	EPMI1#
		C3	1	1	LOBAT

Original Name	New Signal	Mux Input	ATCLK/2 (B)	ATCLK (A)	Muxed Signals
DACK6# (O)	EPMMUX2 (I)	C0	0	0	DRQ0
		C1	0	1	DRQ1
		C2	1	0	DRQ2
		C3	1	1	DRQ3
DACK7# (O)	EPMMUX3 (I)	C0	0	0	PWRBTN#
		C1	0	1	DRQ5
		C2	1	0	DRQ6
		C3	1	1	DRQ7

The DRQ[7:5, 3:0] pins on FireStar have been configured as PIO pins. DRQ[7:5, 3:0] from ISA devices are brought into the 82C602A and sent to FireStar on the EPMMUX[3:2] lines.

To enable the muxing of these signals within the 82C602A, the ATCLK and ATCLK2 signals from FireStar are connected to the 82C602A. ATCLK2 must be programmed to come out on a FireStar PIO pin.

6.2.4 Miscellaneous Power management connectivity

To increase the number of PPWR pins available for Power management (powering down individual power planes on the system, powering down components, enabling/disabling suspend mode of operation for various system components, etc.), the SD lines from FireStar have been connected to the SA[5:0] lines and HDCHRDY line of the 82C602A. These signals are inputs to two internal latches and the latched outputs are the corresponding PPWR outputs. The PPWR0 and the RSDTRV outputs from FireStar are configured as the upper and lower latch enables respectively and are connected to the PCTLH (pin 51) and the PCTLL (pin 87) of the 82C602A.

Miscellaneous power management inputs are brought into the 82C602A (on the RINGI, EPMI#0, etc., inputs) and are sent to FireStar as muxed outputs on the EPMMUX[1:0] lines.

Figure 6-1 Schematics with 602A

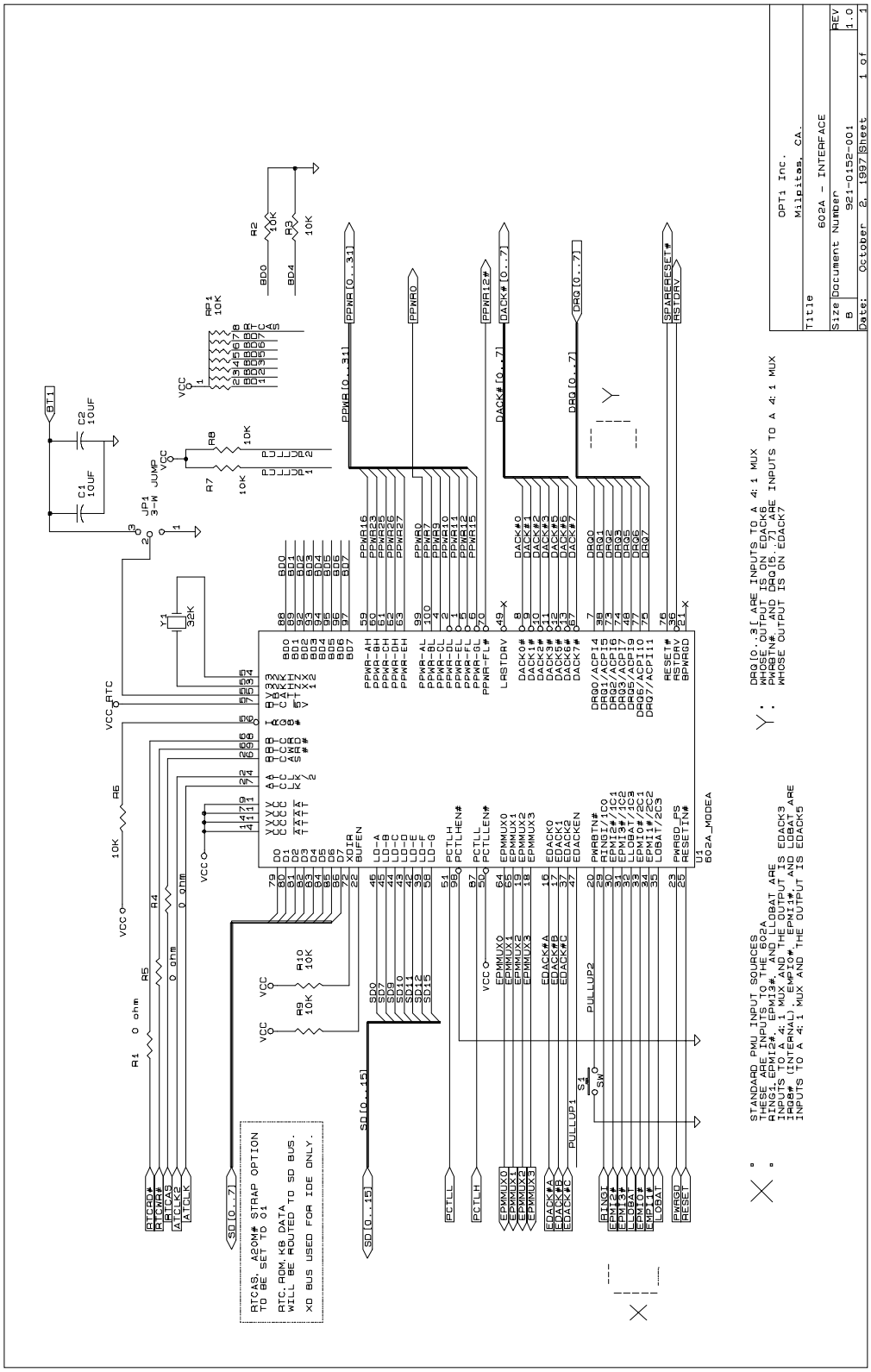

Appendix A. 602A Notebook Companion Chip

A.1 Overview

Notebook Mode A of the OPTi 82C602A chip provides general purpose multiplexers, latches, and logic to anticipate future integrated system designs. This mode is enabled through strap options that operate as described below.

A.1.1 Mode/Chipset Support

The 82C602A must follow the strapping options show in Table A-1. The 82C602A will sense the XD[7:0] bits on the rising edge of the PWRGD input to determine which mode it will enter. In order to achieve a ‘0’ value during reset, place a 4.7KΩ pull-down resistor on the appropriate XD line. In order to achieve a ‘1’ value, no external resistors are needed since the 82C602A contains internal pull-ups on the XD bus.

The 82C602A is available by default in a 100-pin PQFP (plastic quad flat pack). It is also available in a 100-pin TQFP (thin quad flat pack) by special order for all notebook modes.

A.1.2 RTC/CMOS RAM Register Access

The 82C602A provides 256 bytes of RTC/ CMOS RAM register space. These registers are accessed through Ports 070h/ 071h. They are also controlled by PPWR signals for Notebook Mode A.

In Notebook Mode A, the status of the PPWR5 signal determines whether the upper or lower 128 bytes are accessed. The default status of PPWR5 = 1. All accesses to CMOS registers will be directed to the upper 128 bytes until PPWR5 is reset to 0.

In summary, for Notebook Mode A to access the lower 128 bytes follow these steps:

1. Write Port 022h with 55h.
2. Write Port 024h with 20h.

This step must be performed in order to initialize the RTC registers during BIOS setup.

To access the upper 128 bytes of CMOS RAM, follow these steps:

1. Write Port 022h with 55h.
2. Write Port 024h with 22h.

This procedure mat vary based on design. Also, if using ACPI, utilize PCIDV1 E8h instead of SYSCFG 55h.

A.1.3 Design Notes

The following information is important for proper incorporation of the 82C602A in system designs.

1. The 82C602A is a single-voltage part, usually selected as 5.0V. It has no provisions for 3.3V-to-5.0V translation. In most cases this limitation is unimportant, as the 82C602A is primarily an ISA bus interface device. However, for implementations that provide 3.3V input signals, the designer should be aware that 3.3V levels on 5.0V inputs draw excessive idle current (on the order of 1mA per input).

   For example, the ‘373 latch buffer could be used to buffer eight of the CPU address lines to the ISA bus. However, when the system is put into Suspend mode, any buffer inputs that remain at 3.3V will cause a current draw and create an undesirable situation for low-power Suspend mode operation.

2. Pin 57 provides power to the RTC and must always be supplied at 5V. However, this pin also serves to block RTC/CMOS accesses whenever it drops below 4V. This feature protects against CMOS corruption. Therefore, it is imperative that on power down of the system this input must go below 4V before digital VCC goes out of tolerance.

Table A-1 Mode Strapping Options

Mode/Chipset Supported	XD7	XD6	XD5	XD4	XD3	XD2	XD1	XD0
Notebook Mode A/FireStar Plus	1	1	1	0	1	1	1	0

Note: All other strap combinations are reserved for other modes.

A.1.4 Reducing Suspend Power Consumption

In its notebook modes, the 82C602A chip has been qualified for operation at 3.3V. However, the internal RTC still requires 5.0V for proper operation. RTCVCC, pin 57, provides VCC to the RTC during active mode. The VBATT, pin 55, provides power only to maintain the RTC clock and CMOS data during power down modes and is connected to a 2.4V-4.0V battery.

The RTCVCC pin supplies analog circuit power to the RTC during run mode and must always be 5.0V, regardless of whether the rest of the chip is powered at 5.0V or 3.3V.

To save power during low-power Suspend mode (when the rest of the chip is still powered), this pin may be disconnected from the supply voltage. It is important that the supply be *disconnected,* not simply brought to ground. A p-channel MOSFET is ideal for this purpose. The gate of the MOSFET can

be controlled by PPWR0 or PPWR1 from the power control latch.

For example, PPWR0 may be used to switch off RTCVCC by using a P-channel MOSFET as shown in Figure A-1. The auto-toggle feature of the PPWR0 line must be enabled, 54h[0] = 0, and 68h[0] = 1. Setting bits 68h[3:2] = 10 provides the necessary recovery time to the RTC analog VCC. With this implementation, the MOSFET will switch off the power of the analog VCC only during Suspend mode; the only current flow through the analog VCC is leakage current (less than 1µA).

Figure A-1 RTCVCC Switching Circuit Example

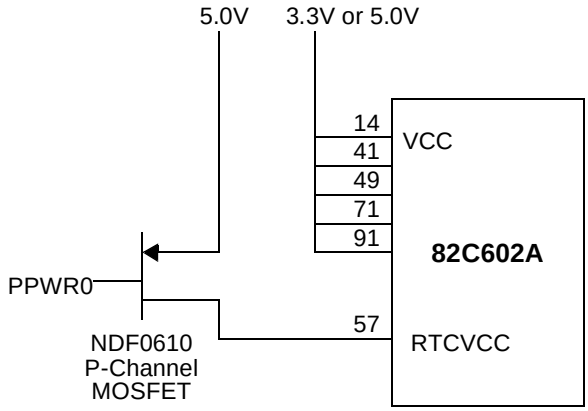

The MOSFET used for testing at OPTi is a National Semiconductor NDF0610, which has a typical gate threshold voltage of -2.4V (-3.5V max / -1V min).

A.1.5 Power Consumption Measurements

Using the circuit of Figure A-1, the power consumption of the 82C602A Notebook Mode in use with the OPTi FireStar Plus chip demonstration board is shown in the following two tables.

Table A-2 Typical Current Consumption Figures for RTC Power

Parameter	Normal	Suspend
Analog VCC	< 1.5µA	~1µA
VBAT	~1µA	~1µA

Table A-3 Typical Current Consumption Figures for Digital Power

Digital VCC = 3.3V		Digital VCC = 5.0V	
Normal	Suspend	Normal	Suspend
< 4mA	< 30µA	< 4mA	250µA

A.1.6 Internal Real-Time Clock (RTC)

The internal RTC of the 82C602A is functionally compatible with the Benchmarq BQ3285. The following sub-sections will give detailed functional and register features of the on-chip RTC of the 82C602A.

RTC Features

- System wake-up capability -- alarm interrupt output active in battery back-up mode
- 4.5V to 5.5V operation
- 242 bytes of general non-volatile storage
- Direct clock/calendar replacement for IBM® AT-compatible computers and other applications
- Less than 1.0µA load under battery operation
- 14 bytes for clock/calendar and control
- BCD or binary format for clock and calendar data
- Calendar in day of the week, day of the month, months, and years, with automatic leap-year adjustment
- Time of day in seconds, minutes, and hours
  - 12- or 24-hour format
  - Optional daylight saving adjustment
- Three individually maskable interrupt event flags:
  - Periodic rates from 122µs to 500ms
  - Time-of-day alarm once-per-second to-once-per-day
  - End-of-clock update cycle.

RTC Overview

The on-chip RTC is a low-power microprocessor peripheral providing a time-of-day clock and 100 year calendar with alarm features and battery operation. The RTC supports 3.3V systems. Other RTC features include three maskable interrupt sources, square-wave output, and 242 bytes of general non-volatile storage.

Wake-up capability is provided by an alarm interrupt, which is active in battery back-up mode.

The RTC write-protects the clock, calendar, and storage registers during power failure. A back-up battery then maintains data and operates the clock and calendar.

The on-chip RTC is a fully compatible real-time clock for PC/AT-compatible computers and other applications. The only external components are a 32.768kHz crystal and a back-up battery.

RTC Address Map

The on-chip RTC provides 14 bytes of clock and control/status registers and 242 bytes of general non-volatile storage. Figure A-2 illustrates the address map for the RTC.

Figure A-2 RTC Address Map

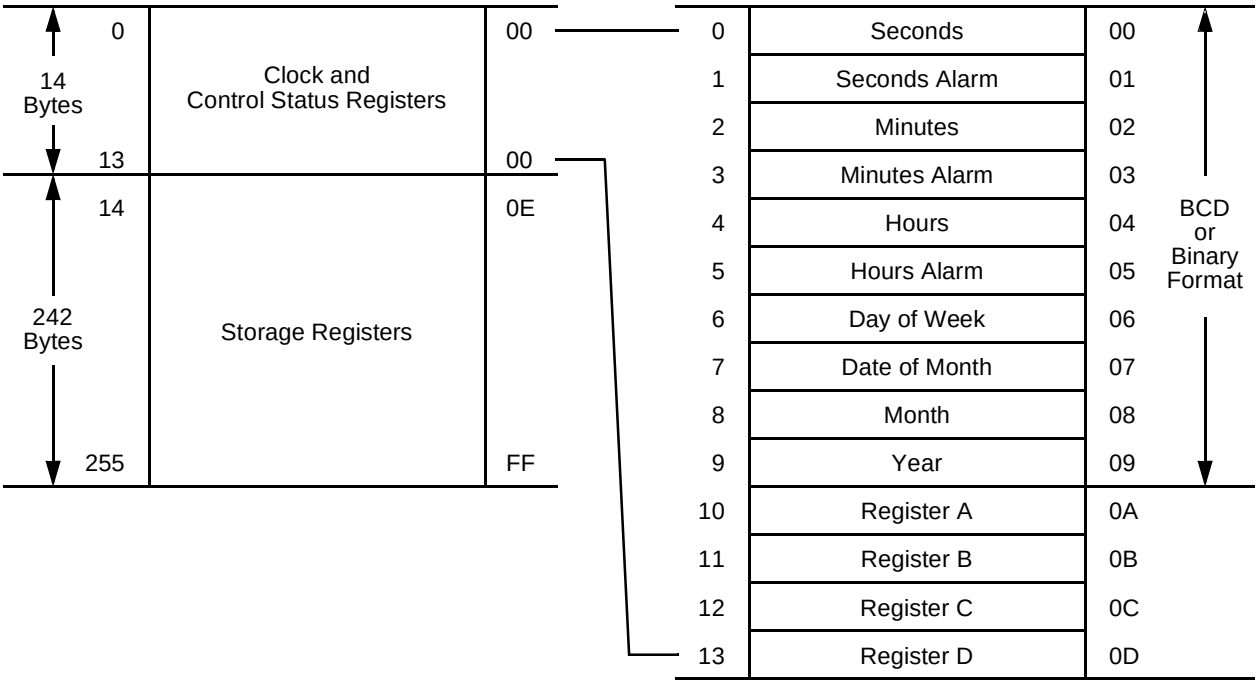

Programming the RTC

The time-of-day, alarm, and calendar bytes can be written in either the BCD or binary format (see Table A-4).

These steps may be followed to program the time, alarm, and calendar:

1. Modify the contents of Register B:
   a. Write a 1 to the UTI bit to prevent transfers between RTC bytes and user buffer.
   b. Write the appropriate value to the data format (DF) bit to select BCD or binary format for all time, alarm, and calendar bytes.
   c. Write the appropriate value to the hour format (HF) bit.
2. Write new values to all the time, alarm, and calendar locations.
3. Clear the UTI bit to allow update transfers.

On the next update cycle, the RTC updates all ten bytes in the selected format.

Table A-4 Time, Alarm, and Calendar Formats

Addr	RTC Bytes	Range		
		Decimal	Binary	Binary-Coded Decimal
0	Seconds	0-59	00h-3Bh	00h-59h
1	Seconds Alarm	0-59	00h-3Bh	00h-59h
2	Minutes	0-59	00h-3Bh	00h-59h
3	Minutes Alarm	0-59	00h-3Bh	00h-59h
4	Hours, 12-hour Format	1-12	01h-0Ch am 81h-8Ch pm	01h-12h am 82h-92h pm
	Hours, 24-hour Format	0-23	00h-17h	00h-23h
5	Hours Alarm, 12-hour Format	1-12	01h-0Ch am 81h-8Ch pm	01h-12h am 82h-92h pm
	Hours Alarm, 24-hour Format	0-23	00h-17h	00h-23h
6	Day of Week (1 = Sunday)	1-7	01h-07h	01h-07h
7	Day of Month	1-31	01h-1Fh	01h-31h
8	Month	1-12	01h-0Ch	01h-12h
9	Year	0-99	00h-63h	00h-99h

Square-wave Output
The RTC divides the 32.768kHz oscillator frequency to produce the 1Hz update frequency for the clock and calendar. Thirteen taps from the frequency divider are fed to a 16:1 multiplexer circuit. The output of this mux is fed to the SQW output and periodic interrupt generation circuitry. The four least-significant bits of Register A, RS[3:0], select among the 13 taps (see Table A-5).

Interrupts
The RTC allows three individually selected interrupt events to generate an interrupt request. These three interrupt events are:

1. The periodic interrupt, programmable to occur once every 122µs to 500ms.
2. The alarm interrupt, programmable to occur once-per-second to once-per-day, is active in battery back-up mode, providing a “wake-up” feature.
3. The update-ended interrupt, which occurs at the end of each update cycle.

Each of the three interrupt events is enabled by an individual interrupt enable bit in Register B. When an event occurs, its event flag bit in Register C is set. If the corresponding event enable bit is also set, then an interrupt request is generated. The interrupt request flag bit (INTF) of Register C is set with every interrupt request. Reading Register C clears all flag bits, including INTF, and makes INT# high-impedance.

Two methods can be used to process RTC interrupt events:

1. Enable interrupt events and use the interrupt request output to invoke an interrupt service routine.
2. Do not enable the interrupts and use a polling routine to periodically check the status of the flag bits.

The individual interrupt sources are described in detail in the following sub-sections.

Periodic Interrupt
The mux output used to drive the SQW output also drives the interrupt generation circuitry. If the periodic interrupt event is enabled by writing a 1 to the periodic interrupt enable bit (PIE) in Register C, an interrupt request is generated once every 122µs to 500ms. The period between interrupts is selected by the same bits in Register A that select the square-wave frequency (see Table A-5). Setting OSC[2:0] in Register A to 011 does not affect the periodic interrupt timing.

Table A-5 Square-Wave Frequency/Periodic Interrupt Rate

Register A Bits				Square-Wave		Periodic Interrupt	
RS3	RS2	RS1	RS0	Frequency	Units	Period	Units
0	0	0	0	None		None	
0	0	0	1	256	Hz	3.90625	ms
0	0	1	0	128	Hz	7.8125	ms
0	0	1	1	8.192	kHz	122.070	µs
0	1	0	0	4.096	kHz	244.141	µs
0	1	0	1	2.048	kHz	488.281	µs
0	1	1	0	1.024	kHz	976.5625	µs
0	1	1	1	512	Hz	1.953125	ms
1	0	0	0	256	Hz	3.90625	ms
1	0	0	1	128	Hz	7.8125	ms
1	0	1	0	64	Hz	15.625	ms
1	0	1	1	32	Hz	31.25	ms
1	1	0	0	16	Hz	62.5	ms
1	1	0	1	8	Hz	125	ms
1	1	1	0	4	Hz	250	ms
1	1	1	1	2	Hz	500	ms

Alarm Interrupt
The alarm interrupt is active in battery back-up mode, providing a “wake-up” capability. During each update cycle, the RTC compares the hours, minutes, and seconds bytes with the three corresponding alarm bytes. If a match of all bytes is found, the alarm interrupt event flag bit, AF in Register C, is set to 1. If the alarm event is enabled, an interrupt request is generated.

An alarm byte may be removed from the comparison by setting it to a “don't care” state. An alarm byte is set to a “don't care” state by writing a 1 to each of its two most significant bits. A “don't care” state may be used to select the frequency of alarm interrupt events as follows:

1. If none of the three alarm bytes is “don't care,” the frequency is once per day, when hours, minutes, and seconds match.
2. If only the hour alarm byte is “don't care”, the frequency is once per hour when minutes and seconds match.
3. If only the hour and minute alarm bytes are “don't care”, the frequency is once per minute when seconds match.
4. If the hour, minute, and second alarm bytes are “don't care”, the frequency is once per second.

Update Cycle Interrupt

The update cycle ended flag bit (UF) in Register C is set to a 1 at the end of an update cycle. If the update interrupt enable bit (UIE) of Register B is 1, and the update transfer inhibit bit (UTI) in Register B is 0, then an interrupt request is generated at the end of each update cycle.

Accessing RTC bytes

Time and calendar bytes read during an update cycle may be in error. Three methods to access the time and calendar bytes without ambiguity are:

1. Enable the update interrupt event to generate interrupt requests at the end of the update cycle. The interrupt handler has a maximum of 999ms to access the clock bytes before the next update cycle begins (see Figure A-3).
2. Poll the update-in-progress bit (UIP) in Register A. If UIP = 0, the polling routine has a minimum of tBUC time to access the clock bytes (see Figure A-3).
3. Use the periodic interrupt event to generate interrupt requests every tPI time, such that UIP = 1 always occurs between the periodic interrupts. The interrupt handler has a minimum of tPI/2 + tBUC time to access the clock bytes (see Figure A-3).

Figure A-3 Update-Ended/Periodic Interrupt Relationship

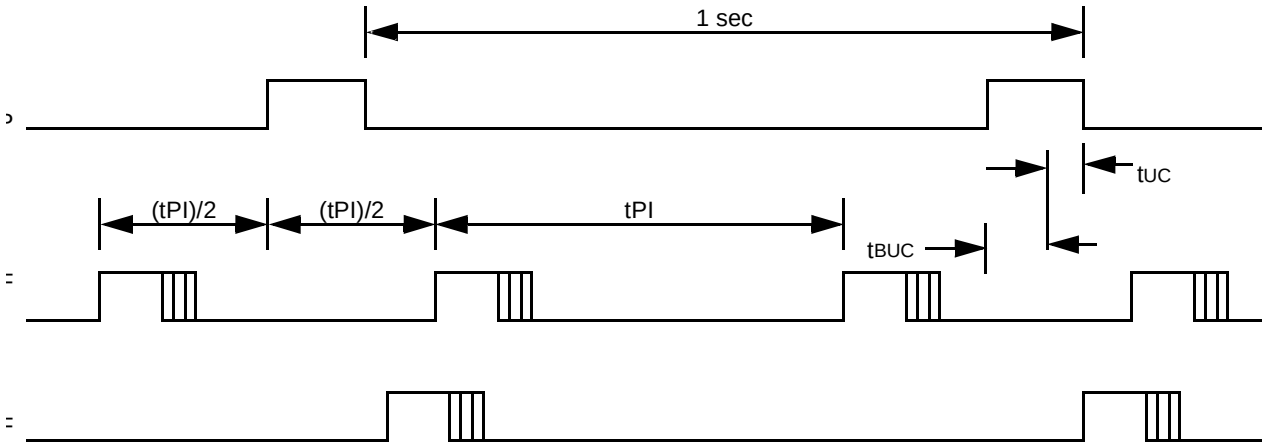

RTC Time-Base Crystal

The RTC’s time-base oscillator is designed to work with an external piezoelectric 32.768kHz crystal. A crystal can be represented by its electrical equivalent circuit and associated parameters as shown in Figure A-4 and Table A-6, respectively.

L1, C1, and R1 form what is known as the motional arm of the circuit. C0 is the sum of the capacitance between electrodes and the capacitance added by the leads and mounting structure of the crystal. The equivalent impedance of the crystal varies with the frequency of oscillation.

There are two frequencies at which the crystal impedance appears purely resistive (X_E = 0). They’re indicated by two points on the graph, known as the series resonant (F_S) and anti-resonant (F_A) frequencies. Oscillators operating the crystal at the resonant frequency (F_S) are termed series resonant circuits, whereas those that operate the crystal around F_A are termed parallel resonant. The on-chip RTC uses a parallel resonant oscillator circuit. The frequency of oscillation in this mode lies between F_S and F_A and is dictated by the effective load capacitance appearing across the crystal inputs, as explained next.

Table A-6 Crystal Parameters

Parameter	Symbol	Value	Unit
Nominal Frequency	F	32.768	kHz
Load Capacitance	C_L	6	pF

Parameter	Symbol	Value	Unit
Motional Inductance	L1	9076.66	H
Motional Capacitance	C1	2.6 x 10-3	pF
Motional Resistance	R1	27	Kohm
Shunt Capacitance	C0	1.1	pF

Figure A-4 Quartz Crystal Equivalent Circuit

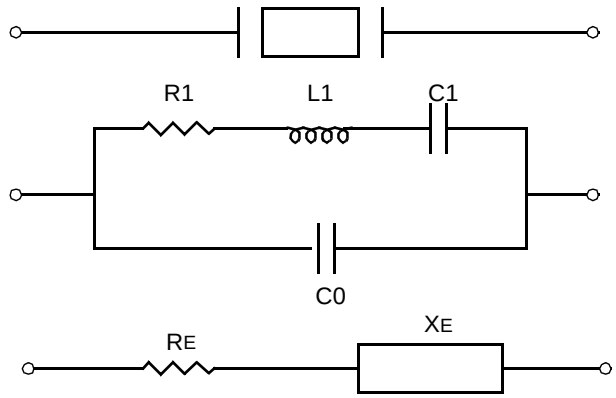

RTC Oscillator

The parallel resonant RTC oscillator circuit is comprised of an inverting micro-power amplifier with a PI-type feedback network. Figure A-6 illustrates a block diagram of the oscillator circuit with the crystal as part of the PI-feedback network. The oscillator circuit ensures that the crystal is operating in the parallel resonance region of the impedance curve.

The actual frequency at which the circuit will oscillate depends on the load capacitance, C_L. This parameter is the dynamic capacitance of the total circuit as measured or computed across the crystal terminals.

A parallel resonant crystal like the DT-26 is calibrated at this load using a parallel oscillator circuit. C_L is computed from C_{L1} and C_{L2} as given below:

$C_L = (C_{L1} * C_{L2}) / (C_{L1} + (C_{L2})$

The RTC's C_{L1} and C_{L2} values are trimmed to provide approximately a load capacitance (C_L) of 6pF across crystal terminals. This is to match the specified load capacitance (6pF) at which the recommended DT-26 crystal is calibrated to resonate at the nominal frequency of 32.768kHz. Referring to the impedance graph of Figure A-5, "A" indicates the point of resonance when C_L equals the specified load capacitance of the crystal.

Figure A-5 Impedance Graph

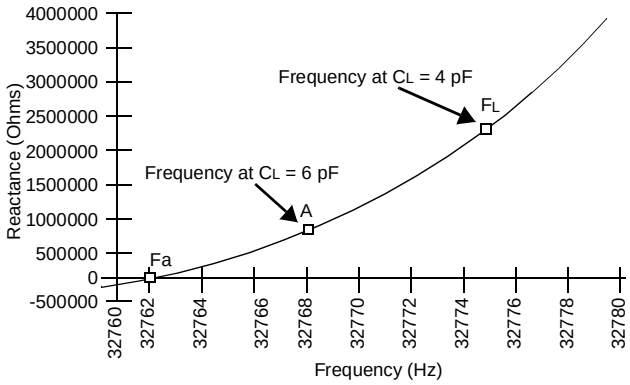

(b) Detailed Area of Parallel Resonance

Time Keeping Accuracy

The accuracy of the frequency of oscillation depends on:

- Crystal frequency tolerance
- Crystal frequency stability
- Crystal aging
- Effective load capacitance in oscillator circuit
- Board layout

Crystal Frequency Tolerance

The frequency tolerance parameter is the maximum frequency deviation from the nominal frequency (in this case 32.768kHz) at a specified temperature, expressed in ppm (parts per million) of nominal frequency. In the case of the Grade A DT-26 crystal, this parameter is ±20 ppm at 25°C.

Crystal Frequency Stability

This parameter, dependent on the angle and type of cut, is defined as the maximum frequency deviation from the nominal frequency over a specified temperature range, expressed in ppm or percentage of nominal frequency.

Figure A-7 shows a typical curve of frequency variation with temperature for the KDS DT-26 crystal.

Figure A-6 RTC Oscillator Circuit Block Diagram

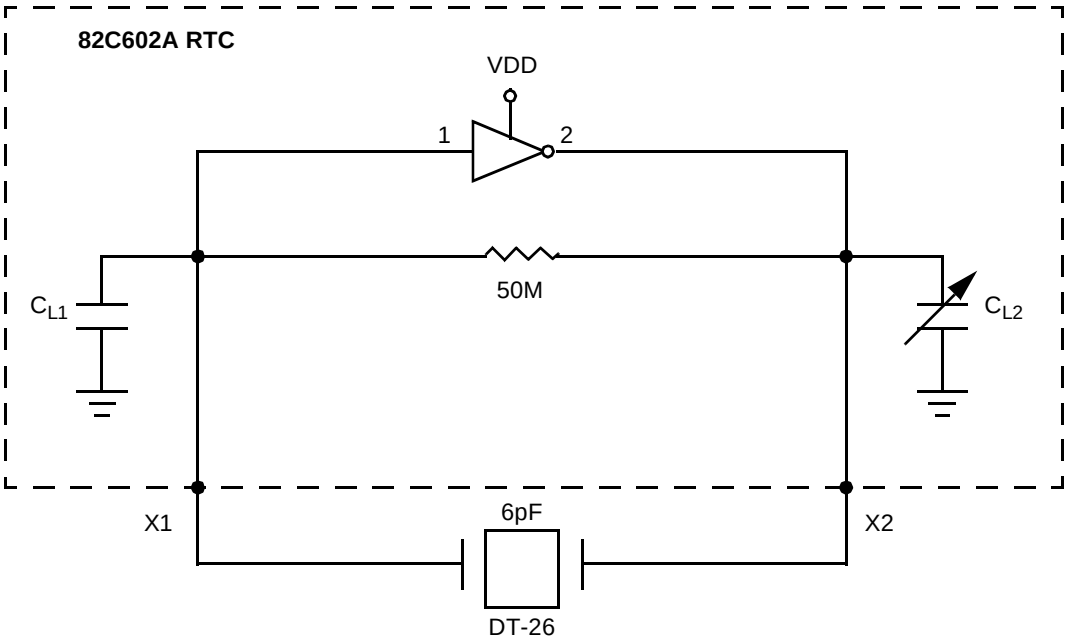

Figure A-7 Typical Temperature Characteristics

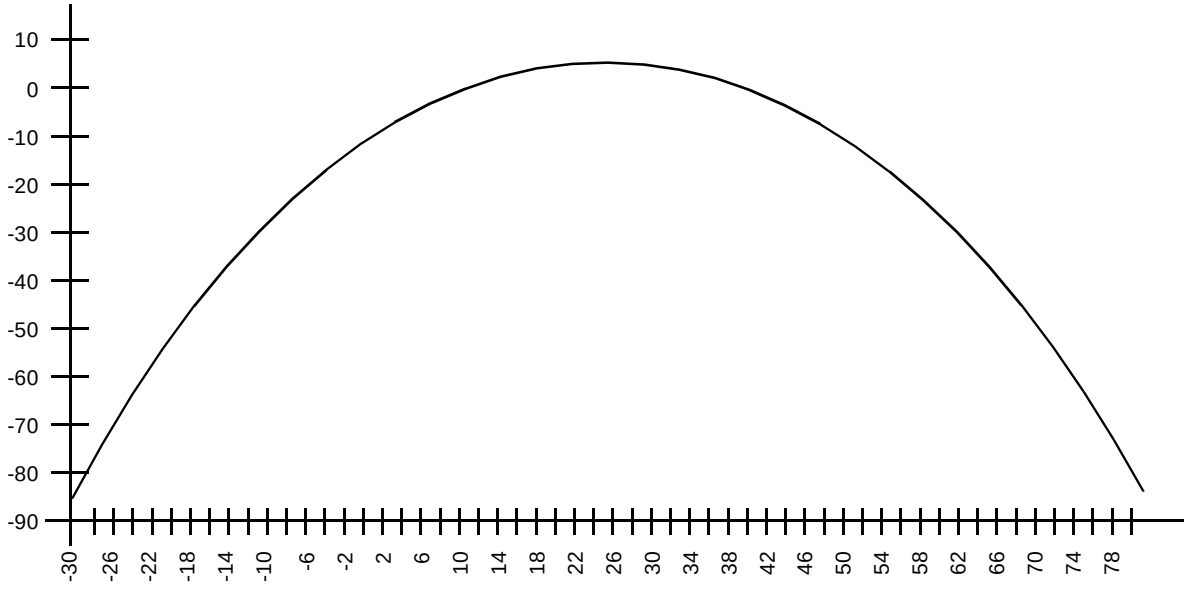

Crystal Aging

As a crystal ages, some frequency shift may be observed. Drift with age is specified to be typically 4 ppm for the first year and 2 ppm per year for the life of the KDS DT-26 crystal.

Load Capacitance

For a parallel resonant calibrated crystal, the crystal manufacturer specifies the load capacitance at which the crystal will "parallel" resonate at the nominal frequency. From the graph of Figure A-8, increasing the effective load capacitance by hanging additional capacitors on either of the X1 or the X2 pin will effectively lower the resonant frequency point "A" toward Fs. The deviation of the frequency Fl with load capacitance is given by:

$F_L = F_S (1 + C1/2 (C0 + C_L))$

where C1 is the crystal motional capacitance and C0 is the crystal shunt stray capacitance, as explained above. C_L is the effective load capacitance across the crystal inputs.

Allowing for capacitance due to board layout traces leading to the X1and X2 pins, the RTC is trimmed internally to provide an effective load capacitance of less than 6pF. Connecting a 6pF crystal directly to the X1 and X2 pins will cause the clock to oscillate approximately 24 ppm faster than the nominal frequency of 32.768kHz, for reason explained previously.

For maximum accuracy, it is recommended that a small trim capacitor (< 8pF) be hooked to the X2 pin to move the resonant point closer to the nominal frequency. The graph of Figure A-8 shows the variation of frequency with additional load capacitance on the X2 pin of the RTC.

Translating the data in Figure A-8 into a practical rule of thumb: for every additional 1.54pF capacitance on the X2 pin, the frequency will decrease by 0.8Hz or a ΔF/F of -24.4 ppm around 82.768kHz.

Board Layout

Given the high input impedance of the crystal input pins X1 and X2, care should be taken to route high-speed switching signal traces away from them. Preferably a ground-plane layer should be used around the crystal area to isolate capacitive-coupling of high frequency signals. The traces from the crystal leads to the X1 and X2 pins must be kept short with minimal bends. A good rule of thumb is to keep the crystal traces within 5mm of the X1 and X2 pins.

Finally, a 0.1µF ceramic by-pass capacitor should be placed close to the VCC pin of the RTC to provide an improved supply into the clock

Oscillator Start-up

Barring accuracy issues, the RTC will oscillate with any 32.768kHz crystal. When hooked to the X1 and X2 pins in certain configurations, however, passive components can lead to oscillator start-up problems:

- Excessive loading on the crystal input pins X1 and X2
- Use of a resistive feedback element across the crystal.

Figure A-8 Frequency Variation Versus Load Capacitance

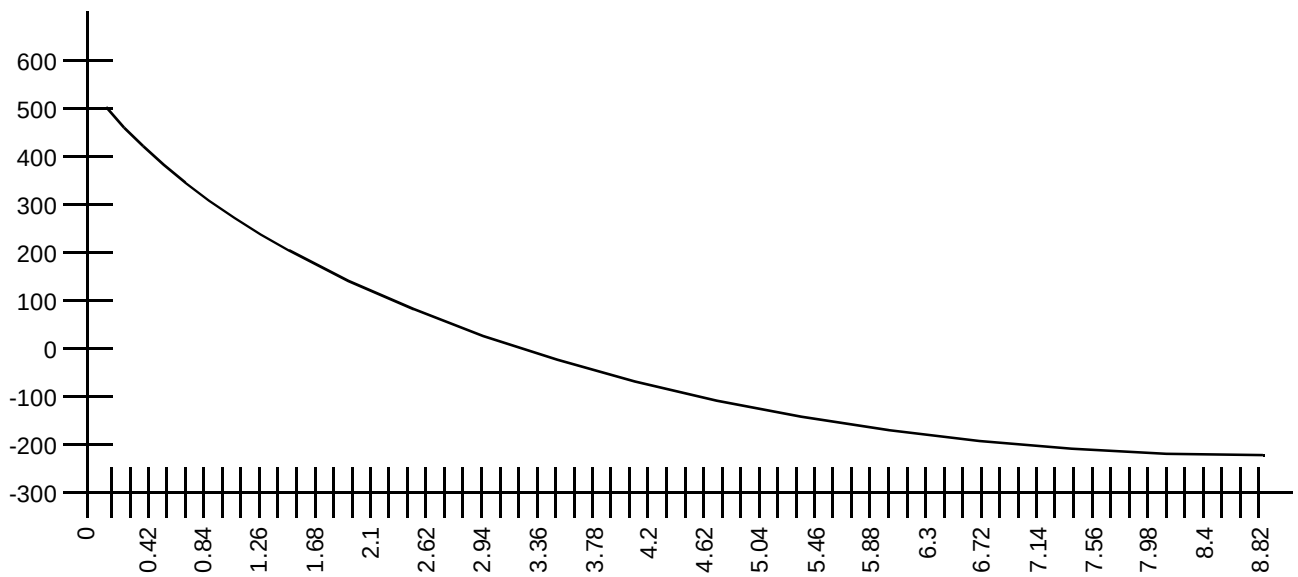

Values above 10pF on either the X1 or X2 pin must be avoided. The feedback element is build into the RTC for start-up and no resistive feedback external to the part is required.

Oscillator Control

When power is first applied to the RTC and VCC is above V_{PFD}, the internal oscillator and frequency divider are turned on by writing a 010 pattern to bits 4 through 6 of Register A. A pattern of 011 behaves as 010 but additionally transforms Register C into a read/write register. This allows the 32.768kHz output on the square-wave pin to be turned on. A pattern of 11X turns the oscillator on, but keeps the frequency divider disabled. Any other pattern to these bits keeps the oscillator off.

Power-Down/Power-Up Cycle

The RTC's power-up/power-down cycles are different. The RTC continuously monitors VCC for out-of-tolerance. During a power failure, when VCC falls below Vpfd (2.53V typical), the RTC write-protects the clock and storage registers. The

power source is switched to BC when VCC is less than V_{PFD} and BC is greater than V_{PFD}, or when VCC is less than V_{BC} and V_{BC} is less than V_{PFD}. RTC operation and storage data are sustained by a valid back-up energy source. When VCC is above V_{PFD}, the power source is VCC. Write-protection continues for t_{CSR} time after VCC rises above V_{PFD}.

The RTC continuously monitors VCC for out-of-tolerance. During a power failure, when VCC falls below V_{PFD} (4.17V typical), the RTC write-protects the clock and storage registers. When VCC is below V_{BC} (3.3V typical), the power source is switched to BC. RTC operation and storage data are sustained by a valid back-up energy source. When VCC is above V_{BC}, the power source is VCC. Write-protection continues for t_{CSR} time after VCC rises above V_{PFD}.

Control/Status Registers

The four control/status registers of the RTC are accessible regardless of the status of the update cycle (see Table A-7).

Register A

Register A programs the frequency of the periodic event rate, and oscillator operation. Register A provides the status of the update cycle. See Table A-8 for Register A's format.

Register B

Register B enables the update cycle transfer operation, square-wave output-interrupt events, and daylight saving adjustment. Register B selects the clock and calendar data formats. See Table A-9 for Register B's format.

Register C

Register C is a read-only event status register. See Table A-10 for Register C's format.

Register D

Register D is a read-only data integrity status register. See Table A-11 for Register D's format.

Table A-7 Control/Status Registers Summary

Register	Loc. (Hex)	Read	Write	Bit Name and State on Reset															
				7 (MSB)		6		5		4		3		2		1		0 (LSB)	
A	0A	Yes	Yes[1]	UIP	NA	OSC2	NA	OSC1	0	OSC0	0	RS3	NA	RS2	NA	RS1	NA	RS0	NA
B	0B	Yes	Yes	UTI	NA	PIE	0	AIE	0	UIE	0	SQWE	0	DF	NA	HF	NA	DSE	NA
C	0C	Yes	No[2]	INTF	0	PF	0	AF	0	UF	0	-	0	32KE	0	-	0	-	0
D	0D	Yes	No	VRT	NA	-	0	-	0	-	0	-	0	-	0	-	0	-	0

Note: NA = Not Affected
1. Except Bit 7
2. Read/write only when OSC[2:0] in Register A is 011 (binary).

Table A-8 Register A

Bit(s)	Type	Function
7	RO	UIP - Update-In-Progress: This read-only bit is set prior to the update cycle. When UIP equals 1, an RTC update cycle may be in progress. UIP is cleared at the end of each update cycle. This bit is also cleared when the update transfer inhibit (UTI) bit in Register B is 1.
6:4	R/W	OSC[2:0] - Oscillator Control Bits 2 through 0: These three bits control the state of the oscillator and divider stages. A pattern of 010 enables RTC operation by turning on the oscillator and enabling the frequency divider. A pattern of 11X turns the oscillator on, but keeps the frequency divider disabled. When 010 is written, the RTC begins its first update after 500ms.
3:0	R/W	RS[3:0] - Rate Select Bits 3 through 0: These bits select one of the 13 frequencies for the SQW output and the periodic interrupt rate, as shown in Table A-4.

Table A-9 Register B

Bit(s)	Type	Function
7	R/W	UTI - Update Transfer Inhibit: This bit inhibits the transfer of RTC bytes to the user buffer. 1 = Inhibits transfer and clears UIE0 = Allows Transfer
6	R/W	PIE - Periodic Interrupt Enable: This bit enables an interrupt request due to a periodic interrupt event. 1 = Enable0 = Disable

Bit(s)	Type	Function
5	R/W	AIE - Alarm Interrupt Enable: This bit enables an interrupt request due to an alarm interrupt event. 1 = Enable 0 = Disable
4	R/W	UIE - Update Cycle Interrupt Enable: This bit enables an interrupt request due to an update ended interrupt event. 1 = Enable 0 = Disable The UIE bit is automatically cleared when the UTI bit equals 1.
3	R/W	SQWE - Square-Wave Enable: This bit enables the square-wave output. 1 = Enabled 0 = Disabled and held Low
2	R/W	DF - Data Format: This bit selects the numeric format in which the time, alarm, and calendar bytes are represented. 1 = Binary 0 = BCD
1	R/W	HF - Hour Format: This bit selects the time-of-day and alarm hour format. 1 = 24-hour format 0 = 12-hour format
0	R/W	DSE - Daylight Saving Enable: This bit enables daylight saving time adjustments when written to 1. On the last Sunday in October, the first time the RTC increments past 1:59:59 AM, the time falls back to 1:00:00 am. On the first Sunday in April, the time springs forward from 2:00:00 am to 3:00:00 am.

Table A-10 Register C

Bit(s)	Type	Function
7	R/W	INTF - Interrupt Request Flag: This flag is set to a 1 when any of the following is true; AIE = 1 and AF = 1 PIE = 1 and PF = 1 UIE = l and UF=1 Reading Register C clears this bit.
6	R/W	PF - Periodic Event Flag: This bit is set to a 1 every tPI time, where tPI is the time period selected by the settings of RS[3:0] in Register A. Reading Register C clears this bit.
5	R/W	AF - Alarm Event Flag: This bit is set to a 1 when an alarm event occurs. Reading Register C clears this bit.
4	R/W	UF - Update Event Flag: This bit is set to a 1 at the end of the update cycle. Reading Register C clears this bit.
3:0	R/W	NU - Not Used - This bit is always set to 0.

Table A-11 Register D

Bit(s)	Type	Function
7	RO	VRT - Valid RAM and Time: 1 = Valid backup energy source 0 = Backup energy source is depleted When the backup energy source is depleted (VRT = 0), data integrity of the RTC and storage registers is not guaranteed.
6:0	RO	NU - Not Used - These bits are always set to 0.

A.2 Signal Definitions

Figure A-9 Notebook Mode A Pin Diagram (100-Pin PQFP)

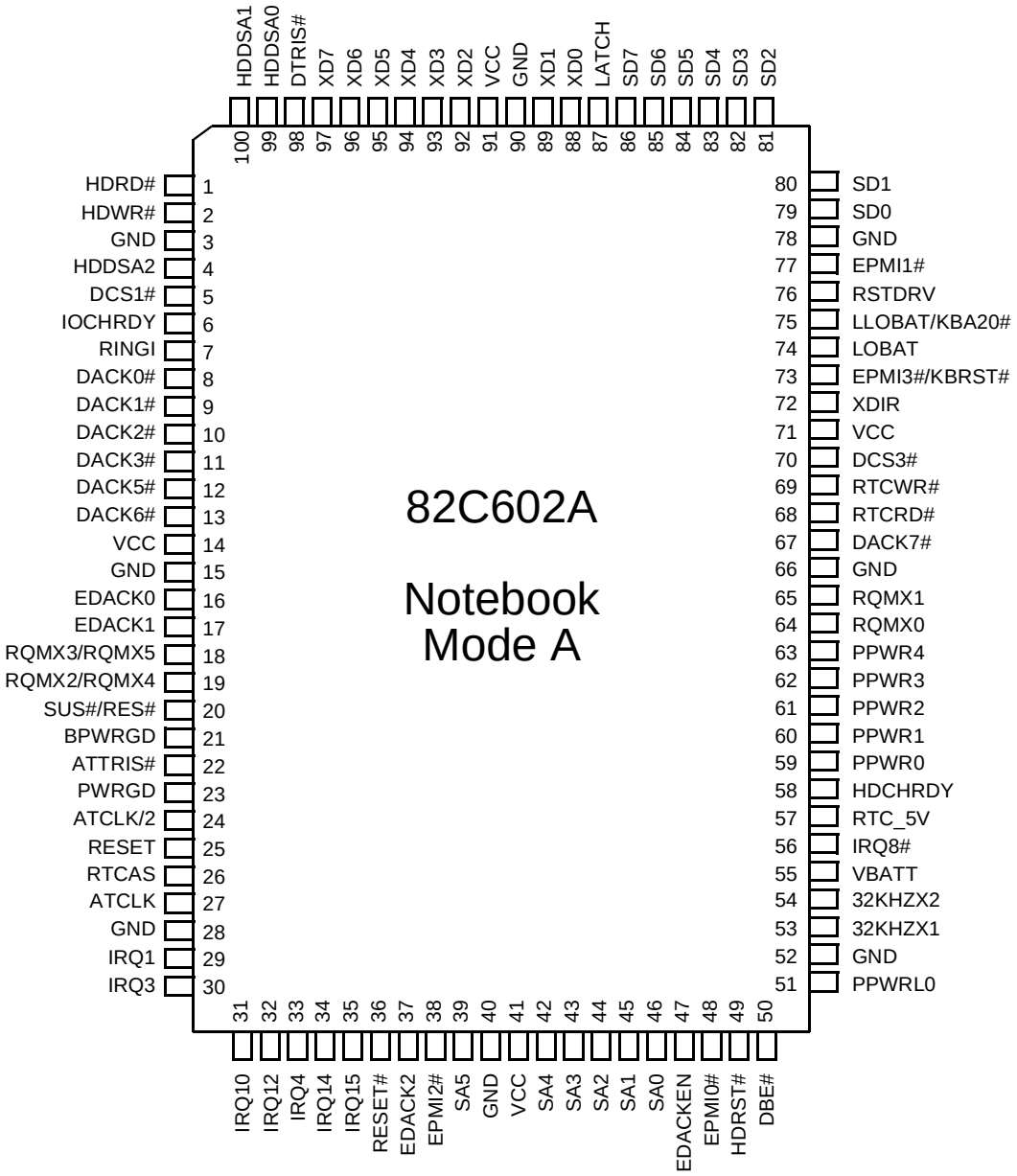

Figure A-10 Notebook Mode A Pin Diagram (100-Pin TQFP)

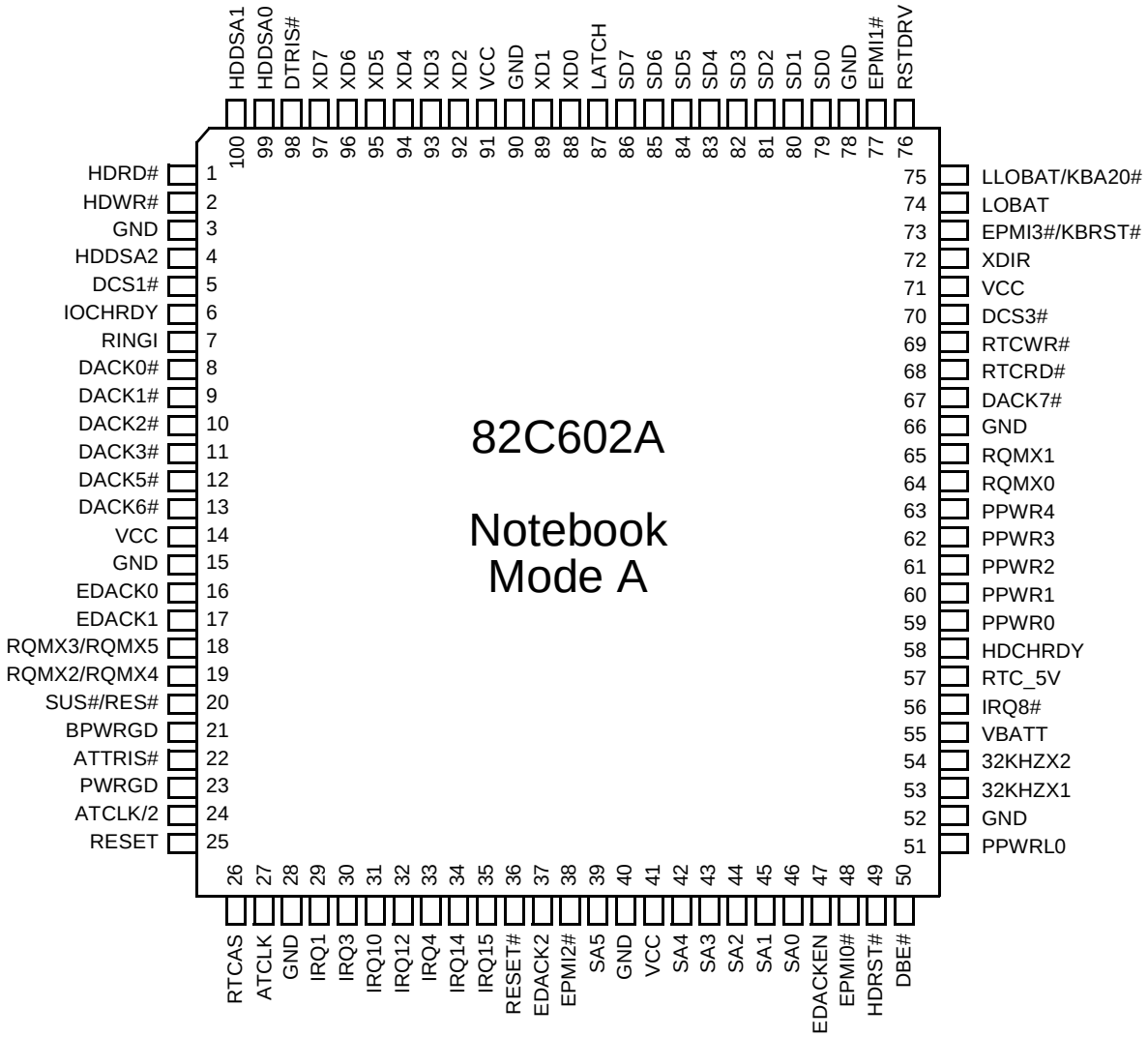

Table A-12 Notebook Mode A - Numerical Pin Cross-Reference List

Pin #	Pin Name	Pin Type	Pin #	Pin Name	Pin Type	Pin #	Pin Name	Pin Type	Pin #	Pin Name	Pin Type
1	HDRD#	O	26	RTCAS	I	51	PPWRL0	I	76	RSTDRV	O
2	HDWR#	O	27	ATCLK	I	52	GND	G	77	EPMI1#	I
3	GND	G	28	GND	G	53	32KHZX1	I	78	GND	G
4	HDDSA2	O	29	IRQ1	I	54	32KHZX2	O	79	SD0	I/O
5	DCS1#	O	30	IRQ3	I	55	VBATT	I	80	SD1	I/O
6	IOCHRDY	O	31	IRQ10	I	56	IRQ8#	O(OD)	81	SD2	I/O
7	RINGI	I	32	IRQ12	I	57	RTC_5V	I	82	SD3	I/O
8	DACK0#	O	33	IRQ4	I	58	HDCHRDY	I	83	SD4	I/O
9	DACK1#	O	34	IRQ14	I	59	PPWR0	O	84	SD5	I/O
10	DACK2#	O	35	IRQ15	I	60	PPWR1	O	85	SD6	I/O
11	DACK3#	O	36	RESET#	O	61	PPWR2	O	86	SD7	I/O
12	DACK5#	O	37	EDACK2	I	62	PPWR3	O	87	LATCH	I
13	DACK6#	O	38	EPMI2#	I	63	PPWR4	O	88	XD0	I/O
14	VCC	P	39	SA5	I	64	RQMX0	O	89	XD1	I/O
15	GND	G	40	GND	G	65	RQMX1	O	90	GND	G
16	EDACK0	I	41	VCC	P	66	GND	G	91	VCC	P
17	EDACK1	I	42	SA4	I	67	DACK7#	O	92	XD2	I/O
18	RQMX3/RQMX5	O	43	SA3	I	68	RTCRD#	I	93	XD3	I/O
19	RQMX2/RQMX4	O	44	SA2	I	69	RTCWR#	I	94	XD4	I/O
20	SUS#/RES#	I	45	SA1	I	70	DCS3#	O	95	XD5	I/O
21	BPWRGD	O(OD)	46	SA0	I	71	VCC	P	96	XD6	I/O
22	ATTRIS#	I	47	EDACKEN	I	72	XDIR	I	97	XD7	I/O
23	PWRGD	I-Sch	48	EPMI0#	I	73	EPMI3#/KBRST#	I	98	DTRIS#	I
24	ATCLK/2	I	49	HDRST#	O	74	LOBAT	I	99	HDDSA0	O
25	RESET	I	50	DBE#	I	75	LLOBAT/KBA20#	I	100	HDDSA1	O

Table A-13 Notebook Mode A - Alphabetical Pin Cross-Reference List

Pin Name	Pin #	Pin Type	Pin Name	Pin #	Pin Type	Pin Name	Pin #	Pin Type	Pin Name	Pin #	Pin Type
ATCLK	27	I	GND	28	G	PPWR0	59	O	SD0	79	I/O
ATCLK/2	24	I	GND	40	G	PPWR1	60	O	SD1	80	I/O
ATTRIS#	22	I	GND	52	G	PPWR2	61	O	SD2	81	I/O
BPWRGD	21	O(OD)	GND	66	G	PPWR3	62	O	SD3	82	I/O
DACK0#	8	O	GND	78	G	PPWR4	63	O	SD4	83	I/O
DACK1#	9	O	GND	90	G	PPWRL0	51	I	SD5	84	I/O
DACK2#	10	O	HDCHRDY	58	I	PWRGD	23	I-Sch	SD6	85	I/O
DACK3#	11	O	HDDSA0	99	O	RESET	25	I	SD7	86	I/O
DACK5#	12	O	HDDSA1	100	O	RESET#	36	O	SUS#/RES#	20	I
DACK6#	13	O	HDDSA2	4	O	RINGI	7	I	VBATT	55	I
DACK7#	67	O	HDRD#	1	O	RQMX0	64	O	VCC	14	P
DBE#	50	I	HDRST#	49	O	RQMX1	65	O	VCC	41	P
DCS1#	5	O	HDWR#	2	O	RQMX2/RQMX4	19	O	VCC	71	P
DCS3#	70	O	IOCHRDY	6	O	RQMX3/RQMX5	18	O	VCC	91	P
DTRIS#	98	I	IRQ1	29	I	RSTDRV	76	O	XD0	88	I/O
EDACK0	16	I	IRQ3	30	I	RTCAS	26	I	XD1	89	I/O
EDACK1	17	I	IRQ4	33	I	RTC_5V	57	I	XD2	92	I/O
EDACK2	37	I	IRQ8#	56	O(OD)	RTCRD#	68	I	XD3	93	I/O
EDACKEN	47	I	IRQ10	31	I	RTCWR#	69	I	XD4	94	I/O
EPMI0#	48	I	IRQ12	32	I	SA0	46	I	XD5	95	I/O
EPMI1#	77	I	IRQ14	34	I	SA1	45	I	XD6	96	I/O
EPMI2#	38	I	IRQ15	35	I	SA2	44	I	XD7	97	I/O
EPMI3#/KBRST#	73	I	LATCH	87	I	SA3	43	I	XDIR	72	I
GND	3	G	LLOBAT/KBA20#	75	I	SA4	42	I	32KHZX1	53	I
GND	15	G	LOBAT	74	I	SA5	39	I	32KHZX2	54	O

A.3 Notebook Mode A Signal Descriptions

Refer to the internal circuitry schematic in Section A.4 for complete details.

A.3.1 Clock and Reset Interface Signals

Signal Name	Pin No.	Signal Type	Signal Description
RESET	25	I	***Reset:*** Reset input from the FireStar Plus.
RESET#	36	O	***Reset:*** The inverted output of RESET (pin 25). This signal is also used to reset the internal real-time clock.
RSTDRV	76	O	***Reset Drive:*** An active high reset output to the AT bus.
PWRGD	23	I-Sch	***Power Good:*** The PWRGD input signal from the power supply. A rising edge on this input is used to sample the strap information.
BPWRGD	21	O (OD)	***Buffered Power Good:*** An open drain output signal to the FireStar Plus.

A.3.2 Interrupt Control Interface Signals

Signal Name	Pin No.	Signal Type	Signal Description
IRQ1, IRQ3, IRQ10, IRQ12	29, 30, 31, 32	I	***Interrupt Request bits 1, 3, 10, and 12:*** Interrupt request inputs from the ISA bus. These inputs are output serially to the FireStar Plus on RQMX0. A low pulse on any of these inputs is internally extended by one ATCLK.
IRQ4, IRQ14, IRQ15	33, 34, 35	I	***Interrupt Request bits 4, 14, and 15:*** Interrupt request inputs from the ISA bus. These inputs are output serially to the FireStar Plus along with IRQ8# on RQMX1. A low pulse on any of these inputs is internally extended by one ATCLK.
RQMX[1:0]	65, 64	O	***Serial Outputs 1 and 0:*** These outputs are sent to the FireStar Plus. The FireStar Plus will demultiplex these lines to decode interrupt and power management information.

A.3.3 ISA DMA Arbiter Interface Signals

Signal Name	Pin No.	Signal Type	Signal Description
DACK[7:0]#	67, 13:8	O	***DMA Acknowledge bits 7 through 0:*** These output signals are directly connected to the ISA bus. They are derived from the EDACK[2:0] and EDACKEN inputs from the FireStar Plus.
EDACK[2:0]	37, 17, 16	I	***Encoded DMA Acknowledge bits 2 through 0:*** These encoded inputs give a 3-to-8 decode for the DMA acknowledge.
EDACKEN	47	I	***Encoded DMA Acknowledge Enable:*** This active high input allows the DACKs to be decoded.

A.3.4 Data Bus and Control Interface Signals

Signal Name	Pin No.	Signal Type	Signal Description
SD[7:0]	86:79	I/O	***System Data AT Bus Lines 7 through 0***
XD[7:0]	97:92, 89, 88	I/O	***XD Bus Data Lines 7 through 0:*** XD4 and XD0 must be sampled low driving reset to enter Notebook Mode A. A 4.7K pull-down resistor is recommended on these lines. All the XD lines on the 82C602A have internal pull-up resistors and do not require any external pull-up resistors.
XDIR	72	I	***XD Bus Direction:*** A direction control signal for the SD bus to/from the XD bus.
ATTRIS#	22	I	***AT Tristate Control:*** When this signal is high, the 82C602A will drive the DACK lines; the SD-XD buffer is also enabled. When low, the DACK lines are tristated and so is the SD-XD buffer.

A.3.5 Power Management Interface Signals

Signal Name	Pin No.	Signal Type	Signal Description
DTRIS#	98	I	***Power Control Output Port Enable:*** This signal, when active, will tristate the power port. When disabled, it will allow output to the power port.
PPWRL0	51	I	***Peripheral Power Latch Control:*** This signal, when active, will latch the power control information on the SA bus and output it to the power control output pins.
PPWR[4:0]	63:59	O	***Peripheral Power Bits 4 through 0:*** These power control outputs can be used to control power to various peripherals.
SUS#/RES#	20	I	***Suspend / Resume:*** A power control input that is monitored by the FireStar Plus.
LOBAT	74	I	***Low Battery:*** A power control input that is monitored by the FireStar Plus.
LLOBAT/KBA20#	75	I	***Low Low Battery or Keyboard ControllerA20#:*** This input can be either LLOBAT (a power control input) or KBA20# from the keyboard controller. When the input is LLOBAT, pin 18 is RQMX3. If the input is KBA20#, pin 18 becomes RQMX5.
ATCLK	27	I	***AT Bus Clock:*** AT bus clock input from the FireStar Plus. This input along with ATCLK/2 will serially output interrupts and power management inputs to the FireStar Plus.
ATCLK/2	24	I	***AT Bus Clock Divide by 2:*** AT bus clock divide by 2 input from the FireStar Plus.
EPMI3#/KBRST#	73	I	***External Power Management Input Bit 3 or Keyboard Reset:*** This input can be either EPMI3# (power management input) or KBRST# from the keyboard controller. When the input is EPMI3#, pin 19 becomes RQMX2. When it is KBRST#, pin 19 becomes RQMX4.
EPMI[2:0]#	38, 77, 48	I	***External Power Management Input Bits 2 through 0:*** These three inputs and EPMI3# will signal the FireStar Plus that an external power management event has occurred.
RINGI	7	I	***Ring Indicator:*** A power control input that is monitored by the FireStar Plus.
RQMX2/RQMX4	19	O	***Multiplexed Power Management Output:*** RQMX2/RQMX4 is a multiplexed output of RINGI, EPMI2#, EPMI3#/KBRST#, and LOBAT. These inputs are multiplexed using ATCLK and ATCLK/2.

Signal Name	Pin No.	Signal Type	Signal Description
RQMX3/RQMX5	18	O	***Multiplexed Power Management Output:*** RQMX3/RQMX5 is a multiplexed output of SUS#/RES#, EMPI0#, EPMI1#, and LLOBAT/KBA20#. These inputs are multiplexed using ATCLK and ATCLK/2.

A.3.6 Real-Time Clock Interface Signals

Signal Name	Pin No.	Signal (Drive) Type	Signal Description
RTCRD#	68	I	***Real-time Clock Read Command:*** This is the data strobe input. The falling edge of this strobe is used to enable the outputs during a read cycle.
RTCWR#	69	I	***Real-time Clock Write Command:*** The rising edge of this input latches data in the internal real-time clock.
RTCAS	26	I	***Real-time Clock Address Strobe:*** RTCAS is used to demultiplex the address/ data bus. The falling edge of AS latches the address on XD[7:0].
RTC_5V	57	I	***Real-time Clock 5.0V:*** This pin must be connected to +5V during normal operation. As soon as this input drops below 4V the RTC/CMOS RAM is protected from writes (read accesses will also be blocked).
VBATT	55	I	***Voltage Battery:*** This pin is connected to the CMOS and RTC battery.
IRQ8#	56	O (OD)	***Interrupt Request Bit 8:*** The alarm output interrupt generated by the internal real-time clock. This pin needs an external pull-up.
32KHZX1	53	I	***Crystal Oscillator Input:*** 32.768KHz XTAL input.
32HKZX2	54	O	***Crystal Oscillator Output:*** 32.768KHz XTAL output.

A.3.7 IDE Interface Signals

Signal Name	Pin No.	Signal Type	Signal Description
DBE#	50	I	***Data Buffer Enable:*** This signal, when active, will allow information to pass to the IDE drive.
DCS1#, DCS3#	5, 70	O	***Drive Chip Select 1 and 3:*** These chip select signals decoded from the host address bus are used to select the Command and Control Block Registers.
HDCHRDY	58	I	***Drive I/O Channel Ready:*** This signal is negated to extend the host transfer cycle of any host register access (read or write) when the drive is not ready to respond to a data transfer request. When HDCHRDY is not negated, HDCHRDY is in a high impedance state.
HDDSA[2:0]	4, 100, 99	O	***Drive Address Lines 2 through 0:*** This is the 3-bit binary coded address asserted by the host to access a register or data port in the drive.
HDRD#	1	O	***Drive I/O Read:*** This is the read strobe signal. The low level of HDRD# enables data from a register or the data port of the drive onto the data bus.
HDRST#	49	O	***Drive Reset:*** This signal is asserted for at least 25msec after voltage levels have stabilized during power-on and negated thereafter unless some event requires that the drive(s) be reset following power-on.

Signal Name	Pin No.	Signal Type	Signal Description
HDWR#	2	O	***Drive I/O Write:*** This is the write strobe signal. The rising edge of DWR# samples data from the data bus into a register or the data port of the drive.
IOCHRDY	6	O	***I/O Channel Ready:*** This signal to the AT bus is used to extend the current cycle for non-zero wait state operations.
SA[5:0]	39, 42:46	I	***System Address Bus Lines 5 through 0:*** These AT bus address lines supply information to the IDE and power latch.
LATCH	87	I	***IDE Latch Enable:*** The input must be high if the internal buffer is used for IDE control. If IDE control is not obtained from the 82C602A, this input may be connected to PPWRL1 of the 82C558N IPC to obtain PPWR[13:8] on pins 5, 1, 2, 4,100, and 99 respectively.

A.3.8 Power and Ground Pins

Signal Name	Pin No.	Signal Type	Signal Description
VCC	14, 41, 71, 91	P	***Power Connection***
GND	3, 15, 28, 40, 52, 66, 78, 90	G	***Ground Connection***

Legend:

G	Ground
I/O	Input/Output
G	Ground
OD	Open Drain
I/O	Input/Output
P	Power
Sch	Schmitt-trigger

A.4 Schematics

Figure A-11 shows schematics of the internal circuitry when in the Notebook Mode A.

Figure A-11 602A Mode A for FireStar Plus

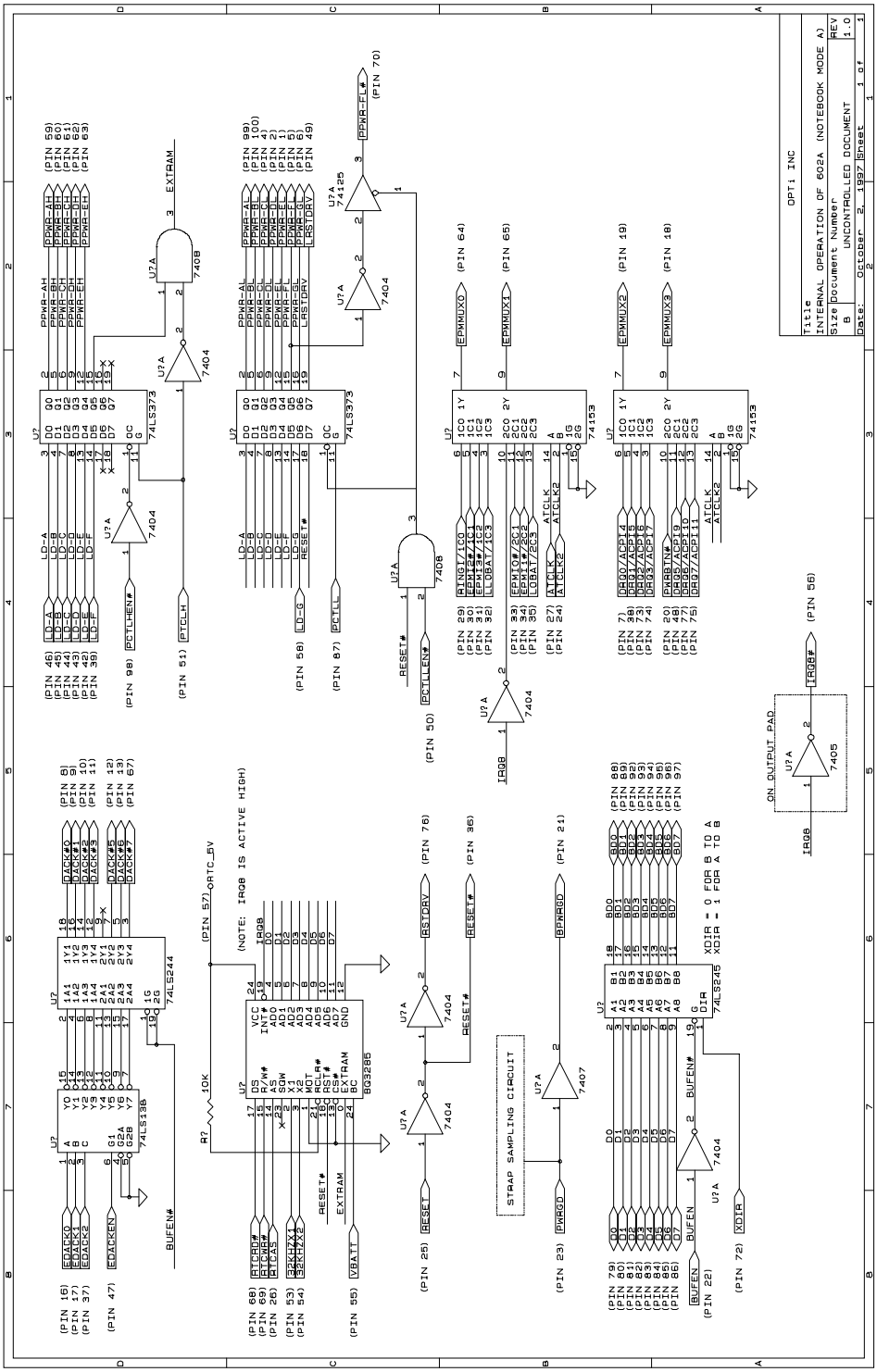

A.5 82C602A Mechanical Package Outline

Figure A-12 82C602A 100-Pin Plastic Quad Flat Pack (PQFP)

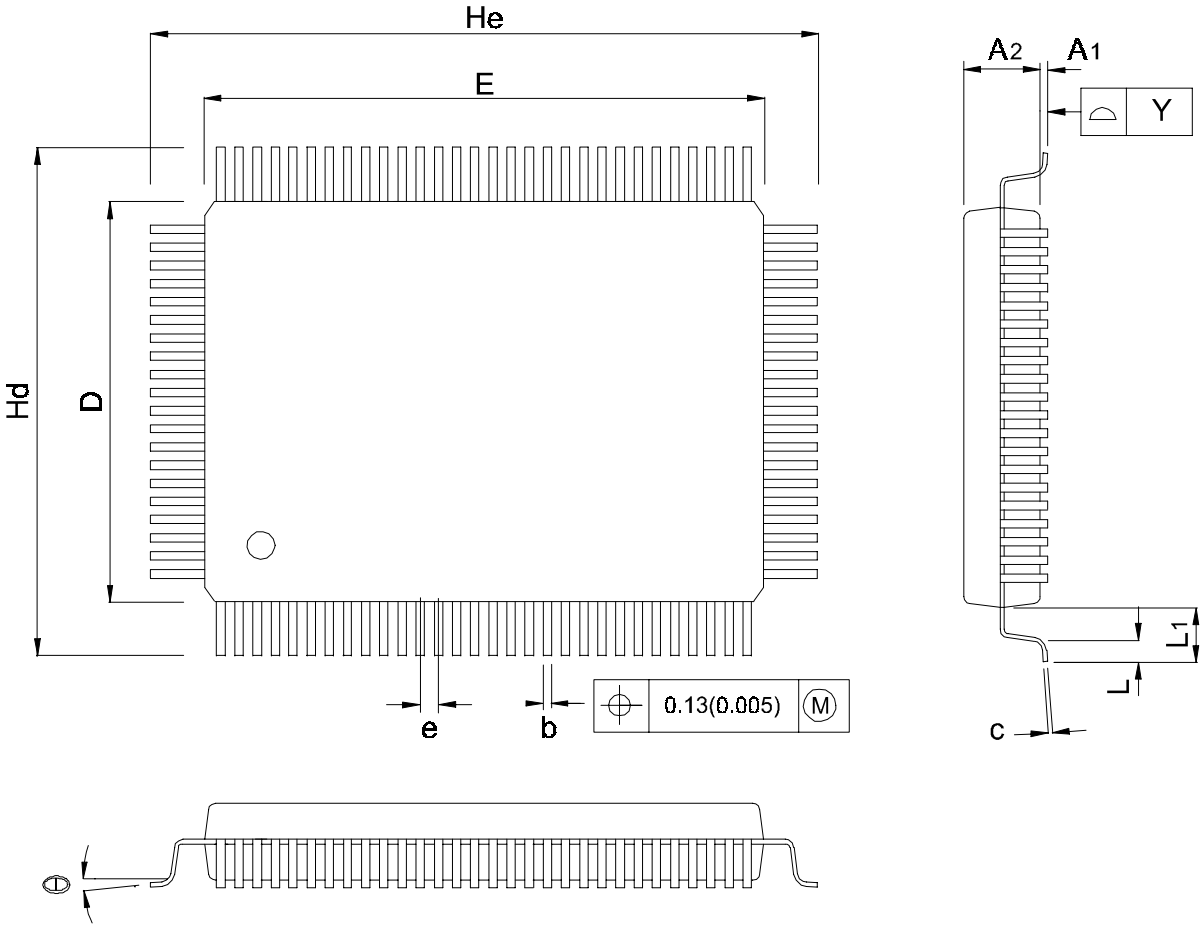

SYMBOL	MILLIMETER MIN.	MILLIMETER NOM.	MILLIMETER MAX.	INCH MIN.	INCH NOM.	INCH MAX.
A_1	0.25	0.35	0.45	0.010	0.014	0.018
A_2	2.57	2.72	2.87	0.101	0.107	0.113
b	0.20	0.30	0.40	0.008	0.012	0.016
c	0.10	0.15	0.20	0.004	0.006	0.008
D	13.90	14.00	14.10	0.547	0.551	0.555
E	19.90	20.00	20.10	0.783	0.787	0.791
e		0.65			0.026	
Hd	17.00	17.20	17.40	0.669	0.677	0.685
He	23.00	23.20	23.40	0.905	0.913	0.921
L	0.65	0.80	0.95	0.025	0.031	0.037
L_1		1.60			0.063	
Y			0.08			0.003
θ	0		7	0		7

Dwg. No.: AS100PQFP-001
Dwg. Rev.: A0 Unit: MM/INCH

Figure A-13 82C602A 100-Pin Thin Quad Pack (TQFP)

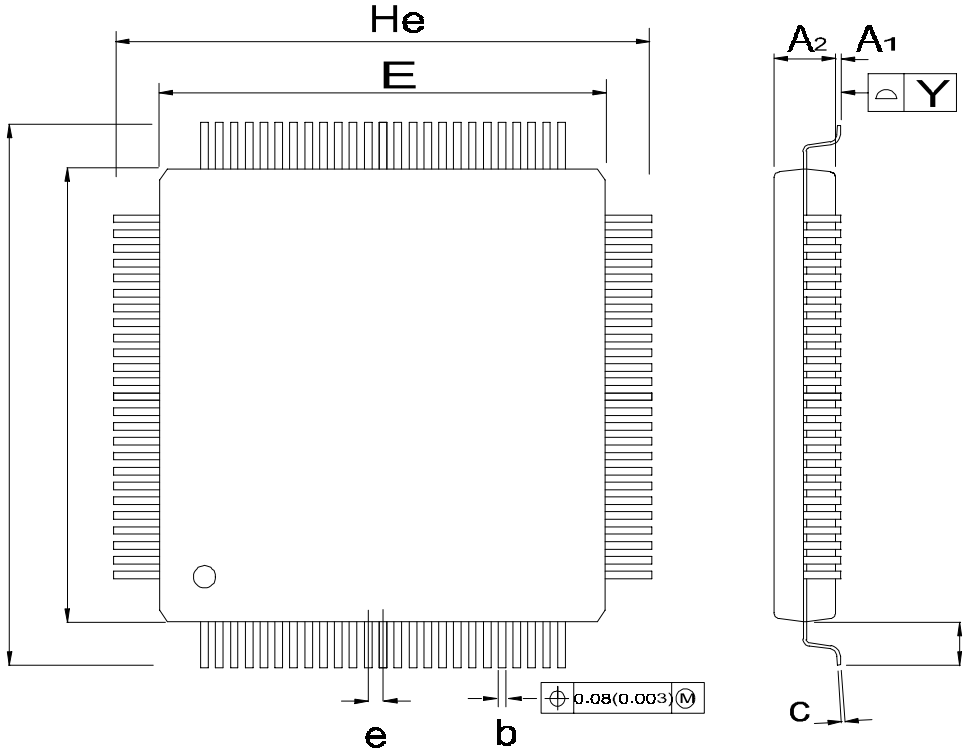

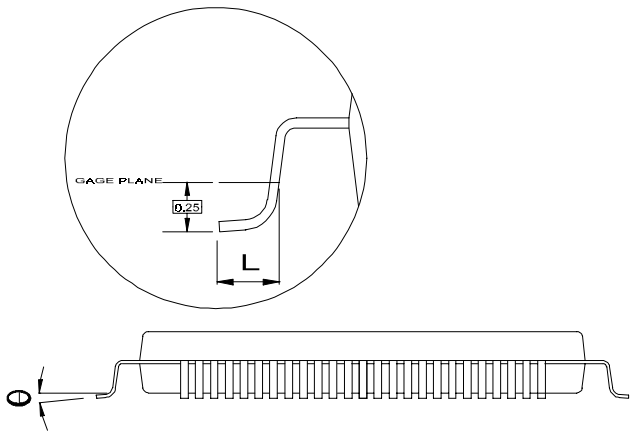

SYMBOL	MILLIMETER			INCH		
	MIN.	NOM.	MAX.	MIN.	NOM.	MAX.
A_1	0.05	0.10	0.15	0.002	0.004	0.006
A_2	1.35	1.40	1.45	0.053	0.055	0.057
b	0.17	0.22	0.27	0.007	0.009	0.011
c	0.090		0.200	0.004		0.008
D	13.90	14.00	14.10	0.547	0.551	0.555
E	13.90	14.00	14.10	0.547	0.551	0.555
e		0.50			0.020	
Hd	15.90	16.00	16.10	0.626	0.630	0.634
He	15.90	16.00	16.10	0.626	0.630	0.634
L	0.45	0.60	0.75	0.018	0.024	0.030
L_1		1.00			0.039	
Y			0.08			0.003
θ	0		7	0		7

Dwg. No.:	AS100TQFP-001		
Dwg. Rev.:	A0	Unit:	MM / INCH

Note: The 82C602A is available in a 100-pin TQFP by special order for all notebook modes; default packaging is 100-pin PQFP

Appendix B. Register Descriptions

B.1 PCIDV0 Register Space

The PCI Configuration Register Space designated as PCIDV0 is accessed through Configuration Mechanism #1 as Bus #0, Device #0, and Function #0.

PCIDV0 00h-3Fh are PCI-specific registers while PCIDV0 40h-FFh are system control related registers. Table B-1 gives the bit formats for these registers.

Table B-1 PCIDV0 00h-FFh

7	6	5	4	3	2	1	0
PCIDV0 00h			**Vendor Identification Register (RO) - Byte 0**				**Default = 45h**
PCIDV0 01h			**Vendor Identification Register (RO) - Byte 1**				**Default = 10h**
PCIDV0 02h			**Device Identification Register (RO) - Byte 0**				**Default = 01h**
PCIDV0 03h			**Device Identification Register (RO) - Byte 1**				**Default = C7h**
PCIDV0 04h			**Command Register - Byte 0**				**Default = 07h**
Address/data stepping (RO): 0 = Disable (always)	PERR# output pin: 0 = Disable (always)	Reserved	Memory write and invalidate cycle generation (RO): Must = 0 (always) No memory write and invalidate cycles will be generated by the 82C700.	Special cycles (RO): Must = 0 (always) The 82C700 does not respond to the PCI special cycle.	Bus master operations (RO): Must = 1 (always) This allows the 82C700 to perform bus master operations at any time. (Default = 1)	Memory access (RO): Must = 1 (always) The 82C700 allows a PCI bus master access to memory at anytime. (Default = 1)	I/O access (RO): Must = 1 (always) The 82C700 allows a PCI bus master I/O access at any time. (Default = 1)
PCIDV0 05h			**Command Register - Byte 1**				**Default = 00h**
Reserved						Fast back-to-back to different slaves: 0 = Disable 1 = Enable	SERR# output pin (RO): 0 = Disable (always)
PCIDV0 06h			**Status Register - Byte 0**				**Default = 80h**
Fast back-to-back capability (RO): 0 = Not Capable 1 = Capable (Default = 1) Also see PCIDV0 46h[2].	Reserved						

Table B-1 PCIDV0 00h-FFh (cont.)

7	6	5	4	3	2	1	0
PCIDV0 07h			**Status Register - Byte 1**				**Default = 00h**
Detected parity error: Must = 0 (always)	SERR# status: Must = 0 (always)	Master abort status: Must = 0 (always)	Received target abort status: 0 = No target abort 1 = Target abort occurred	Signaled target abort status: Must = 0 (always)	DEVSEL# timing status (RO): Must = 01 (always) Indicates medium timing selection; the 82C700 asserts the DEVSEL# based on medium timing. (Default = 01)		Data parity detected: Must = 0 (always)
PCIDV0 08h			**Revision Identification Register (RO)**				**Default = 10h**
- The chip revision number in the PCI configuration space consists of two parts: a major revision number and a minor revision number. The 8-bit register is interpreted as x.yh, where for example revision 2.1 of the chip would be read as two BCD digits, 0010 0001b. Software programmers must take care in using the minor revision number, because the number may change between register- and software-equivalent versions of the chip.							
PCIDV0 09h			**Class Code Register (RO) - Byte 0**				**Default = 00h**
PCIDV0 0Ah			**Class Code Register (RO) - Byte 1**				**Default = 00h**
PCIDV0 0Bh			**Class Code Register (RO) - Byte 2**				**Default = 06h**
PCIDV0 0Ch			**Reserved**				**Default = 00h**
PCIDV0 0Dh			**Master Latency Timer Register (RO)**				**Default = 00h**
PCIDV0 0Eh			**Header Type Register (RO)**				**Default = 00h**
PCIDV0 0Fh			**Built-In Self-Test (BIST) Register (RO)**				**Default = 00h**
PCIDV0 10h-2Bh			**Reserved**				**Default = 00h**
PCIDV0 2Ch-2Dh			**Subsystem Vendor ID** (Write one time only)				**Default = 00h**
PCIDV0 2Eh-2Fh			**Subsystem ID** (Write one time only)				**Default = 00h**
PCIDV0 30h-3Fh			**Reserved**				**Default = 00h**

Table B-1 PCIDV0 00h-FFh (cont.)

7	6	5	4	3	2	1	0
PCIDV0 40h			**Memory Control Register - Byte 0**				**Default = 00h**
PCI video frame buffer write posting hole: These bits map onto address bits A[31:30]. Together with PCIDV0 41h[7:0] they define the 4MB window where write posting can be masked.		Reserved	Reserved	0 = Control of writes being posted on PCI bus is determined by SYSCFG 15h[5:4]. 1 = No writes will be posted on PCI bus except writes to video memory and frame buffer areas. Also see bits 2 and 1.	Write posting to the video frame buffer control: If bit 3 = 0: 0 = Enable 1 = Disable If bit 3 = 1: 0 = Disable 1 = Enable	Write posting to the video memory (A0000h-BFFFFh) control: If bit 3 = 0: 0 = Enable 1 = Disable If bit 3 = 1: 0 = Disable 1 = Enable	I/O cycle write post control: 0 = Disable 1 = Enable
PCIDV0 41h			**Memory Control Register - Byte 1**				**Default = 00h**
PCI video frame buffer write posting hole: - These bits map onto address bits A[29:22]. - Together with PCIDV0 40h[7:6] they define the 4MB window where write posting can be masked.							
PCIDV0 42h			**Memory Control Register - Byte 2**				**Default = 00h**
Reserved.						This bit must be set to 1 to correct improper operation while switching between DRAM banks.	Allow HA drive-back during CPU memory accesses: 0 = Disable 1 = Enable
PCIDV0 43h			**Internal Project Revision - Reserved**				**Default = 20h**
PCIDV0 44h			**Data Path Register 1**				**Default = 00h**
6DW FIFO for CPU write to PCI: 0 = Disable 1 = Enable	16QW FIFO for PCI read from DRAM: 0 = Disable 1 = Enable	16QW FIFO for PCI write to DRAM: 0 = Disable 1 = Enable	6QW FIFO for CPU write to DRAM: 0 = Disable 1 = Enable	Memory read accesses in DBC if PCIDV0 44h[0] = 1 and 47h[7] = 1: 0 = SDRAM 1 = Reserved	DBC ping-pong buffer used for PCI master write X-1-1-1: 0 = Disable 1 = Enable	DBC ping-pong buffer used for PCI master read X-1-1-1: 0 = Disable 1 = Enable	Memory read accesses in the DBC: 0 = FP Mode 1 = EDO/ SDRAM

Table B-1 PCIDV0 00h-FFh (cont.)

7	6	5	4	3	2	1	0
PCIDV0 45h			**Data Path Control Register 2**				**Default = 00h**
Reserved		Ping-pong buffer reset of CPU read EDO is qualified with HDOE#. 0 = Disable 1 = Enable	When IADV# = 0, BE[7:0]# are forced to 00h for write (CPU-to-DRAM and CPU-to-PCI) cycle control. 0 = Disable 1 = Enable	Reserved	Reserved.	Byte merge for CPU write to DRAM: 0 = Disable 1 = Enable	Reserved
PCIDV0 46h			**Data Path Control Register 3**				**Default = 00h**
Reserved: Write to 0							
PCIDV0 47h			**Data Path Control Register 4**				**Default = 00h**
SDRAM memory read accesses in DBC: 0 = Disable 1 = Enable	CPU-to-PCI FIFO clearing when combination changed: 0 = Do not clear 1 = Clear	PCI-to-DRAM FIFO clearing when combination changed: 0 = Do not clear 1 = Clear	CPU-to-DRAM FIFO clearing when combination changed: 0 = Do not clear 1 = Clear	82C700 register is writable: 0 = Enable 1 = Disable (cnfg-writes blocked within DBC)	New DLE# generation during 64-bit PCI read/write. 0 = Disable 1 = Enable	Reserved	
PCIDV0 48h			**Data Path Control Register 5**				**Default = 00h**
Reserved		During refresh cycles if this bit = 1, the RAS# corresponding to the bank with size 0 will not be generated for SDRAM.	Aggressive SDCAS#/SDRAS# stepping. 0 = Disable 1 = Enable	Reserved	SDRAM mode select 000 = Normal SDRAM mode 001 = NOP command enable 010 = All banks precharge 011 = Mode register command enable 100 = CBR cycle enable All other combinations = Reserved		
PCIDV0 49h-4Bh			**Reserved**				**Default = 00h**
PCIDV0 4Ch			**MCACHE Control Register**				**Default = 00h**
Reserved.	Enable GWE#/BWE L2 cache interface 0 = Disable 1 = Enable	Reserved	Reserved	Reserved. Set to 1 whenever ISA retry is enabled	Reserved	MA13 functionality on the TDI pin 0 = Disable 1 = Enable	Reserved
PCIDV0 4Dh			**Delay Adjustment Register**				**Default = 00h**
Reserved	Reserved	SDRAM bank 5 enable/disable 0 = Disable 1 = Enable	SDRAM bank 4 enable/disable 0 = Disable 1 = Enable	Reserved	Internal DLE0# delay adjustment for DRAM read: 00 = I/O buffer delay 01 = 6ns 10 = 3ns 11 = No delay		Reserved

Table B-1 PCIDV0 00h-FFh (cont.)

7	6	5	4	3	2	1	0
PCIDV0 4Eh			**SDRAM Control Register 1**				**Default = 00h**
Enable DTYI delay when SDRAM + L2 + Piping enabled 0 = Disabled 1 = Enabled	Reserved	Reserved					
PCIDV0 4Fh-53h			**Reserved**				**Default = 00h**
PCIDV0 54h			**SDRAM Control Register 2**				**Default = 00h**
SDRAM 16/64 Mbit slect for bank 1 0 = 16Mb 1 = 64Mb	SDRAM 16/64 Mbit slect for bank 0 0 = 16Mb 1 = 64Mb	SDRAM leadoff timing for Bank 5 0 = 7 CLK leadoff 1 = 8 CLk leadoff	SDRAM leadoff timing for Bank 4 0 = 7 CLK leadoff 1 = 8 CLk leadoff	SDRAM leadoff timing for Bank 3 0 = 7 CLK leadoff 1 = 8 CLk leadoff	SDRAM leadoff timing for Bank 2 0 = 7 CLK leadoff 1 = 8 CLk leadoff	SDRAM leadoff timing for Bank 1 0 = 7 CLK leadoff 1 = 8 CLk leadoff	SDRAM leadoff timing for Bank 0 0 = 7 CLK leadoff 1 = 8 CLk leadoff
PCIDV0 55h			**SDRAM Control Register 3**				**Default = 00h**
Aggressive stepping of DWE for SDRAM write cycles 0 = Disable stepping 1 = Enable Stepping	SDRAM and hidden refresh fix 0 = Disable fix 1 = Enable fix	Reserved. Set this bit to 1, only if there is no EDO in the system	Reserved	SDRAM 16/64 Mbit slect for bank 5 0 = 16Mb 1 = 64Mb	SDRAM 16/64 Mbit slect for bank 4 0 = 16Mb 1 = 64Mb	SDRAM 16/64 Mbit slect for bank 3 0 = 16Mb 1 = 64Mb	SDRAM 16/64 Mbit slect for bank 2 0 = 16Mb 1 = 64Mb
PCIDV0 56h			**Reserved**				**Default = 00h**
PCIDV0 57h			**ISA retry Register**				**Default = 00h**
Handling of BOFF# generation when a retry occurs with a pending Master request 0 = Through target abort 1 = Extends retry timer during master cycle	BOFF# generation for any PCI/ISA cycle retry 0 = Disable 1 = Enable	BOFF# generation irrespective of operation underway if retry 0 = Disable 1 = Enable	Double synchronization of PCI cycle indicator for BOFF# generation 0 = Disable 1 = Enable	AHOLD generation for all retried PCI write cycles 0 = Disable 1 = Enable	Fix for Odd words being dropped during a retry of a 64bit PCI write 0 = Disable 1 = Enable	Reserved	
PCIDV0 58h-FFh			**Reserved**				**Default = 00h**

B.2 SYSCFG Register Space

An indexing scheme is used to access the System Control Register Space (SYSCFG). Port 022h is used as the Index Register and Port 024h as the Data Register. Each access to a register within this space consists of:

1) a write to Port 022h, specifying the desired register in the data byte,
2. followed by a read or write to Port 024h with the actual register data.

The index resets after every access; so every data access (via Port 024h) must be preceded by a write to Port 022h even if the same register is being accessed consecutively.

Port 023h is the Data Register for DMA clock select.

Table B-3 gives the bit formats for the registers located at SYSCFG 00h-2Fh. Table B-4 gives the bit formats for the registers located at SYSCFG 30h-FFh which are the power management registers.

B.2.1 System Configuration Register Index/Data Programmable

The SYSCFG index/data ports default to 022h/024h as in previous OPTi chipsets, but now these registers are accessible at other locations as well. PCIDV1 5Fh is provided to program the upper bits of the index/data port I/O address. These register bits default to 0, leaving the traditional 022h/024h locations as index/data. Refer to Table B-2.

Table B-2 SYSCFG Base Select Register

7	6	5	4	3	2	1	0
PCIDV1 5Fh			**Config. Register Index/ Data Port Address**				
Configuration Register Index/Data Port Address bits A[15:8]: This byte provides the upper address bits of the 16-bit address for the system configuration registers index/data port. Bits A[7:0] always point to 022h/024h. At reset this register defaults to 0, so the full I/O address for the index/data ports is 0022/0024h.							

Table B-3 SYSCFG 00h-2Fh

7	6	5	4	3	2	1	0
SYSCFG 00h			**Byte Merge/Prefetch & Sony Cache Module Control Register**				**Default = 00h**
Enable pipelining of single CPU cycles to memory: 0 = Disable 1 = Enable	SDRAM pipelining fix. This bit needs to be set to 1, before setting SYSCFG 29h[7] = 1 0 = Disable 1 = Enable fix	Reserved. Set to 0 always	Reserved. Set to 0 always	Reserved. Set to 0 always	Reserved. Set to 00 always.		Reserved. Set to 0 always
SYSCFG 01h			**DRAM Control Register 1**				**Default = 00h**
Row address HOLD after RAS# active: 0 = 2 CPUCLKs 1 = 1 CPUCLK	RAS# active/ inactive when starting a master cycle: 0 = RAS inactive 1 =RAS active	RAS pulse width used during refresh: 00 = 7 CPUCLKs 01 = 6 CPUCLKs 10 = 5 CPUCLKs 11 = 4 CPUCLKs	CAS pulse width during reads: 0 = 3 CPUCLKs 1 = 2 CPUCLKs For 1 CPUCLK width, refer to SYSCFG 1Ch[0].	CAS pulse width during writes: 0 = 3 CPUCLKs 1 = 2 CPUCLKs	RAS precharge time: 00 = 6 CPUCLKs 01 = 5 CPUCLKs 10 = 4 CPUCLKs 11 = 3 CPUCLKs		

Table B-3 SYSCFG 00h-2Fh (cont.)

7	6	5	4	3	2	1	0
SYSCFG 02h			**Cache Control Register 1**				**Default = 00h**
L2 cache size selection: **If SYSCFG 0Fh[0] = 0** 00 = 64KB 01 = 128KB 10 = 256KB 11 = 512KB	**If SYSCFG 0Fh[0] = 1** 00 = 1MB 01 = Reserved 10 = Reserved 11 = Reserved	L2 cache write policy: 00 = L2 cache write-through 01 = Adaptive writeback Mode 1 10 = Adaptive writeback Mode 2 11 = L2 cache writeback		L2 cache operating mode select: 00 = Disable 01 = Test Mode 1; External Tag Write (Tag data write-through SYSCFG 07h) 10 = Test Mode 2; External Tag Read (Tag data read from SYSCFG 07h) 11 = Enable L2 cache		DRAM posted write: 0 = Disable 1 = Enable	CAS precharge time: 0 = 2 CPUCLKs 1 = 1 CPUCLK
SYSCFG 03h			**Cache Control Register 2**				**Default = 00h**
Timing for burst writes to L2 cache: 00 = X-4-4-4 01 = X-3-3-3	10 = X-2-2-2 11 = X-1-1-1	Leadoff cycle time for writes to L2 cache: 00 = 5-X-X-X 01 = 4-X-X-X	10 = 3-X-X-X 11 = 2-X-X-X	Timing for burst reads to L2 cache: 00 = X-4-4-4 01 = X-3-3-3	10 = X-2-2-2 11 = X-1-1-1	Leadoff cycle time for reads to L2 cache: 00 = 5-X-X-X 01 = 4-X-X-X	10 = 3-X-X-X 11 = 2-X-X-X
SYSCFG 04h			**Shadow RAM Control Register 1**				**Default = 00h**
CC000h-CFFFFh read/write control: 00 = Read/write PCI bus 01 = Read from DRAM/write to PCI 10 = Read from PCI/write to DRAM 11 = Read/write DRAM		C8000h-CBFFFh read/write control: 00 = Read/write PCI bus 01 = Read from DRAM/write to PCI 10 = Read from PCI/write to DRAM 11 = Read/write DRAM		Sync SRAM pipelined read cycle 1-1-1-1 enable:(1) 0 = Implies leadoff T-state for read pipe-lined cycle = 2(2) 1 = Enables leadoff T-state for read pipe-lined cycle = 1(3)	E0000h-EFFFFh range selection: Determines whether this region will be treated like the F0000 BIOS area or whether it will always be non-cacheable. 0 = E0000h-EFFFFh area will always be non-cache-able 1 = E0000h-EFFFFh area will be treated like the F0000h BIOS area. If this bit is set, then SYSCFG 06h[3:2] and [1:0] Should be set identically.	C0000h-C7FFFh read/write control: 00 = Read/write PCI bus 01 = Read from DRAM/write to PCI 10 = Read from PCI/write to DRAM 11 = Read/write DRAM	

(1) If SYSCFG 03h[3:2] = 11, then this register setting is valid.

(2) It will be a 3-1-1-1 cycle followed by a 2-1-1-1 cycle, or a 3-1-1-1 cycle for successive pipelined cycles, based on SYSCFG 10h[5].

(3) It will be a 3-1-1-1 cycle followed by a 1-1-1-1 cycle for successive pipelined cycles. SYSCFG 10h[5] must be set to 1.

Table B-3 SYSCFG 00h-2Fh (cont.)

7	6	5	4	3	2	1	0
SYSCFG 05h			**Shadow RAM Control Register 2**				**Default = 00h**
DC000h-DFFFFh read/write control: 00 = Read/write PCI bus 01 = Read from DRAM/write to PCI 10 = Read from PCI/write to DRAM 11 = Read/write DRAM		D8000h-DBFFFh read/write control: 00 = Read/write PCI bus 01 = Read from DRAM/write to PCI 10 = Read from PCI/write to DRAM 11 = Read/write DRAM		D4000h-D7FFFh read/write control: 00 = Read/write PCI bus 01 = Read from DRAM/write to PCI 10 = Read from PCI/write to DRAM 11 = Read/write DRAM		D0000h-D3FFFh read/write control: 00 = Read/write PCI bus 01 = Read from DRAM/write to PCI 10 = Read from PCI/write to DRAM 11 = Read/write DRAM	
SYSCFG 06h			**Shadow RAM Control Register 3**				**Default = 00h**
DRAM hole in system memory from 80000h-9FFFFh:(1) 0 = No hole in memory 1 = Enable hole in memory	Wait state addition for PCI master snooping: 0 = Do not add a wait state for the cycle access finish to do the snooping 1 = Add a wait state for the cycle access to finish and then do the snooping	C0000h-C7FFFh cacheability: 0 = Not cacheable 1 = Cacheable in L1 and L2 (L1 disabled by SYSCFG 08h[0])	F0000h-FFFFFh cacheability: 0 = Not cacheable 1 = Cacheable in L1 and L2 (L1 disabled by SYSCFG 08h[0])	F0000h-FFFFFh read/write control: 00 = Read/write PCI bus 01 = Read from DRAM/write to PCI 10 = Read from PCI/write to DRAM 11 = Read/write DRAM If SYSCFG 04h[2] = 1, then the E0000h-EFFFFh read/write control should have the same setting as this.		E0000h-EFFFFh read/write control: 00 = Read/write PCI bus 01 = Read from DRAM/write to PCI 10 = Read from PCI/write to DRAM 11 = Read/write DRAM	
(1) This setting gives the user the option to have some other device in the address range 80000h-9FFFFh instead of system memory. When bit 7 is set, the 82C700 will not start the system DRAM controller for accesses to this particular address range.							
SYSCFG 07h			**Tag Test Register**				**Default = 00h**
- Data from this register is written to the tag, if in Test Mode 1 (refer to SYSCFG 02h). - Data from the tag is read into this register, if in Test Mode 2 (refer to SYSCFG 02h).							

Table B-3 SYSCFG 00h-2Fh (cont.)

7	6	5	4	3	2	1	0
SYSCFG 08h			**CPU Cache Control Register**				**Default = 00h**
Cache single/ double bank selected. 0 =Double bank L2 configuration chosen 1 =Single bank L2 configuration chosen	Snoop filtering for bus masters:(1) 0 = Disable 1 = Enable	CPU HITM# pin sample timing: 0 = Delay 1 CLK (HITM# sampled on 3rd rising edge of PCICLK after EADS# assertion) 1 = No delay (HITM# sampled on 2nd rising edge of PCICLK after EADS# assertion)	Parity checking: 0 = Disable 1 = Enable Not supported.	Tag and Dirty on the same/different chip. 0 = Tag and Dirty RAM are on separate chips 1 = Tag and Dirty are on the same chip	CPU address pipelining for DRAM burst cycles: 0 = Disable 1 = Enable (Allow: X-2-2-2-3-2-2-2 if SYSCFG 1Fh[5] = 1 or X-2-2-2-2-2-2-2 if SYSCFG 1Fh[5] = 0 or X-2-2-2-X-2-2-2 if SYSCFG 1Fh[5] = 0 and 11[4] = 1)	L1 cache writeback and write-through control: 0 = Write-through only 1 = Writeback enabled	BIOS area cacheability in L1 cache: Determines if system BIOS area E0000h-FFFFFh (if SYSCFG 04h[2] = 1) or F0000h-FFFFFh (if SYSCFG 04h[2] = 0), and video BIOS area C0000h-C7FFFh is cacheable in L1 or not. 0 = Cacheable 1 = Not Cacheable
(1) For a master request if the subsequent read/write is within the same cache line, CPU 'Inquire' cycles are not done until there is a cache line miss (i.e., line comparator not activated for accesses within the same cache line).							
SYSCFG 09h			**System Memory Function Register**				**Default = 00h**
DRAM Hole B size: 00 = 512KB 10 = 2MB 01 = 1MB 11 = 4MB Address for this hole is specified in SYSCFG 0Bh[7:0] and 0Ch[3:2]		DRAM Hole B control mode: 00 = Disable 01 = WT for L1 and L2 10 = Non-cacheable for L1 and L2 11 = Enable hole in DRAM		DRAM Hole A size: 00 = 512KB 10 = 2MB 01 = 1MB 11 = 4MB Address for this hole is specified in SYSCFG 0Ah[7:0] and 0Ch[1:0]		DRAM Hole A control mode: 00 = Disable 01 = WT for L1 and L2 10 = Non-cacheable for L1 and L2 11 = Enable hole in DRAM	
SYSCFG 0Ah			**DRAM Hole A Address Decode Register**				**Default = 00h**
DRAM Hole A starting address: - These bits along with SYSCFG 0Ch[1:0] are used to specify the starting address of DRAM Hole A. - These bits, AST[7:0], map onto HA[26:19] lines.							
SYSCFG 0Bh			**DRAM Hole B Address Decode Register**				**Default = 00h**
DRAM Hole B starting address: - These bits along with SYSCFG 0Ch[3:2] are used to specify the starting address of DRAM Hole B. - These bits, BST[7:0], map onto HA[26:19] lines.							
SYSCFG 0Ch			**DRAM Hole Higher Address**				**Default = 00h**
Reserved. Set to 0 always.	Fast BRDY# generation for DRAM write page hits. BRDY# for DRAM writes generated on: 0 = 4th CPUCLK 1 = 3rd CPUCLK	Reserved. Set to 0 always	Reserved. Set to 0 always.	DRAM Hole B starting address: These bits are used in conjunction with the bits in SYSCFG 0Bh to specify the starting address of DRAM Hole B. These bits, BST[9:8], map onto HA[28:27].		DRAM Hole A starting address: These bits are used in conjunction with the bits in SYSCFG 0Ah to specify the starting address of DRAM Hole A. These bits, AST[9:8], map onto HA[28:27].	

Table B-3 SYSCFG 00h-2Fh (cont.)

7	6	5	4	3	2	1	0
SYSCFG 0Dh			**Clock Control Register**				**Default = 00h**
Reserved. Set to 0 always.	Reserved. Set to 0 always.	BOFF# generation control: 0 = No change in BOFF# generation 1 = BOFF# not generated if request from PCI-to-ISA bridge is removed before last BRDY# Recommend to set this bit if ISA refresh is enabled.	Reserved. Set to 0 always.	Enable A0000h-BFFFFh as system memory: 0 = No 1 = Yes	Add one more wait state during PCI master cycle with Intel-type address toggling(1): 0 = No 1 = Yes	Give FireStar control of the PCI bus on STOP# generation after HITM# is active: 0 = No 1 = Yes(2)	CPU clock is slowed down to below 33MHz: 0 = No 1 = Yes

(1) If the PCI master does its address toggling in the style of the Intel 486 burst, rather than a linear burst mode style, then one wait state needs to be added.

(2) FireStar has control over the PCI bus until the writeback is completed. If PCI master pre-snoop has been enabled (SYSCFG 0Fh[7] = 1), 0Dh[1] should be set to 1.

SYSCFG 0Eh			**PCI Master Burst Control Register 1**				**Default = 00h**
Reserved. Set to 0 always..	ISA/DMA master through internal MRD#/MWR#: 0 = Disable 1 = Enable This bit must be turned off for DMA support with SDRAM.	Reserved. Set to 0 always.	Reserved. Set to 0 always.	Parity check during master cycles (if SYSCFG 08h[4] = 1): 0 = Enable 1 = Disable	Generate NA# for every single transfer cycle: 0 = Disable 1 = Enable	Write protection for L1 BIOS: 0 = No 1 = Yes	PCI line comparator (if SYSCFG 08h[6] = 1): 0 = Use line comparator in PCI master 1 = Generate inquire cycle for every new FRAME#

Table B-3 SYSCFG 00h-2Fh (cont.)

7	6	5	4	3	2	1	0
SYSCFG 0Fh			**PCI Master Burst Control Register 2**				**Default = 00h**
PCI pre-snoop: 0 = Disable 1 = Enable(1) Also see SYSCFG 0Dh[1].	Insert wait states for ISA master access: 0 = No 1 = Yes	CPU-to-DRAM deep buffer in L2 WT mode: 0 = Disable 1 = Enable	0 = Default method 1 = If internal PCICYC and BKFRAME are active, retry the PCI cycle block EADS# generation.	New mode of single cycle NA#: 0 =No change in cache write hit timing 1 =Cache write hit single trans-fer cycles will take 3 CLKS to comple if the line is already dirty	Generate ADSC# for sync SRAM 1 clock after CPU ADS# in read cycle: 0 = No 1 = Yes(2)	Reserved. Set to 0 always.	Cache size selection: This bit along with SYSCFG 02h[1:0] defines the L2 cache size. 0 = < 1MB 1 = 1MB
(1) FireStar generates a pre-snoop cycle to the CPU assuming that the PCI master will do a burst. (2) SYSCFG 0Fh[2] needs to be set if pipelined sync SRAMs are being used.							
SYSCFG 10h			**Miscellaneous Control Register 1**				**Default = 00h**
CPU to PCI/ ISA slave cycle triggered: 0 = After 2nd T2 1 = After 1st T2	Cache modified write cycle timing: 0 = No delay on CA4 1 = CA4 is delayed one-half clock	Leadoff cycle for a pipelined read: 0 = 3-X-X-X read followed by a 3-X-X-X pipelined read cycle 1 = 3-X-X-X read followed by a 2-X-X-X pipelined read cycle	2-X-X-X pipelined write hit cycles: 0 = Disable 1 = Enable	Move the write pulse one-half a clock later in X-2-2-2 write hit cycles: 0 = No 1 = Yes	Move the write pulse one-half a clock earlier in 3-X-X-X write hit cycles: 0 = No 1 = Yes	Reserved	PCICLK select control:(1) 0 = PCICLK is async to CPUCLK 1 = PCICLK is sync to CPUCLK
(1) If bit 0 is set, (i.e., sync PCI implementation) then the timing constraints between the PCICLK and CPUCLK inputs to FireStar must be met. PCICLK <= CPUCLK/2 period before CPUCLK PCICLK <= 0.5ns after CPUCLK. Note that in the sync PCICLK option, PCICLK = CPUCLK/2.							
SYSCFG 11h			**Miscellaneous Control Register 2**				**Default = 00h**
Reserved		Cache inactive during Idle state control: This bit con-trols the chip selects of the SRAMs. 0 = SRAM active always 1 = SRAM inactive dur-ing Idle state	CPU address pipelining for DRAM burst cycles: 0 = Controlled by SYSCFG 08h[2] and 1F[5] 1 = Slow pipe-lining (allow X-2-2-2-X-2-2-2 when SYSCFG 08h[2] = 1 and 1F[5] = 0	L2 cache type: 0 = No SRAM 1 = Sync. SRAM This bit should be set to 1 by the BIOS, if L2 cache is being used in the sys-tem	Page miss posted write: 0 = Enable 1 = Disable	ATWLRDYB used to block CSX when BOFFX	Delay start: 0 = Do not delay inter-nal master cycles after an inquire cycle 1 = Delay inter-nal master cycles by 1 PCICLK after inquire cycle

Table B-3 SYSCFG 00h-2Fh (cont.)

7	6	5	4	3	2	1	0
SYSCFG 12h			**Refresh Control Register**				**Default = 00h**
REFRESH# pulse source: 0 = 82C700 or ISA master is source of REFRESH# input 1 = 32KHz clock Not supported.	Sync SRAM, linefill cache write timing: 0 = Normal 1 = Delay 1 CPUCLK	Suspend mode refresh: 00 = From CPUCLK state machine 01 = Self-refresh based on 32KHz only 10 = Normal refresh based on 32KHz only 11 = Reserved		Slow refresh: Refresh on: 00 = Every REFRESH#/32KHz falling edge 01 = Alternate REFRESH#/32KHz falling edge 10 = One in four REFRESH#/ 32KHz falling edge 11 = Every REFRESH#/32KHz toggle		LA[23:17] enable from 8Fh during refresh: 0 = Disable 1 = Enable	Reserved. Set to 0 always.
SYSCFG 13h			**Memory Decode Control Register 1**				**Default = 00h**
Reserved	Full decode for logical Bank 1 (RAS1#): 000 = 0Kx36 001 = 256Kx36 (2MB) 010 = 512Kx36 (4MB) 011 = 1Mx36 (8MB) 100 = 2Mx36 (16MB) 101 = 4Mx36 (32MB) 110 = 8Mx36 (64MB) 111 = 16Mx36 (128MB)			SMRAM: 0 = Disable 1 = Enable See SYSCFG 14h[3]	Full decode for logical Bank 0 (RAS0#): 000 = 0Kx36 001 = 256Kx36 (2MB) 010 = 512Kx36 (4MB) 011 = 1Mx36 (8MB) 100 = 2Mx36 (16MB) 101 = 4Mx36 (32MB) 110 = 8Mx36 (64MB) 111 = 16Mx36 (128MB)		
SYSCFG 14h			**Memory Decode Control Register 2**				**Default = 00h**
Data buffer control during configuration cycles: 0 = Normal 1 = Generate internal HDOE# signal Must = 1 for EDO timing.	Full decode for logical Bank 3 (RAS3#): 000 = 0Kx36 001 = 256Kx36 (2MB) 010 = 512Kx36 (4MB) 011 = 1Mx36 (8MB) 100 = 2Mx36 (16MB) 101 = 4Mx36 (32MB) 110 = 8Mx36 (64MB) 111 = 16Mx36 (128MB)			SMRAM control: Inactive SMIACT#: 0 = Disable SMRAM 1 = Enable SMRAM(1) Active SMIACT#: 0 = Enable SMRAM for both Code and Data(1) 1 = Enable SMRAM for Code only(1)	Full decode for logical Bank 2 (RAS2#): 000 = 0Kx36 001 = 256Kx36 (2MB) 010 = 512Kx36 (4MB) 011 = 1Mx36 (8MB) 100 = 2Mx36 (16MB) 101 = 4Mx36 (32MB) 110 = 8Mx36 (64MB) 111 = 16Mx36 (128MB)		
(1) If SYSCFG 13h[3] is set.							
SYSCFG 15h			**PCI Cycle Control Register 1**				**Default = 00h**
CPU master to PCI memory slave write IRDY# control: 00 = 3 PCICLKs after data 01 = 2 PCICLKs after data 10 = 1 PCICLK after data 11 = 0 PCICLK after data		CPU master to PCI slave write posting, bursting control: 00 = No posting, no bursting 01 = Posting only, no bursting 10 = Posting, with conservative bursting 11 = Posting, with aggressive bursting		Master retry timer: Selects the delay before retry is attempted. 00 = 10 PCICLKs 01 = 18 PCICLKs 10 = 34 PCICLKs 11 = 66 PCICLKs		Reserved	PCI FRAME# generation control: 0 = Conservative mode in CPU pipelined cycle 1 = Aggressive mode

Table B-3 SYSCFG 00h-2Fh (cont.)

7	6	5	4	3	2	1	0
SYSCFG 16h			**Dirty/Tag RAM Control Register**				**Default = A0h**
This bit along with bit 5 and PCICLK3 strap define DIRTY, CMD# as PCICLK3 on the CMD# pin, and CACS# or DIRTY options on the CACS# pin.(1)	Reserved	Tag RAM size selection: 0 = 8-bit 1 = 7-bit (Default) Selects CACS# for 7-bit and DIRTY for 8-bit tag(1)	Single write hit leadoff cycle in a combined Dirty/Tag implementation 0 = 5 cycles 1 = 4 cycles	Pre-snoop control: 0 = Pre-snoop for starting address 0 only 1 = Pre-snoop for all addresses except those on the line boundary	Synchronization between PCICLK and CPUCLK: 0 = PCICLK async to CPUCLK 1 = PCICLK sync to CPUCLK (skew not to exceed –2ns to 15ns)	Reserved	Internal HDOE# timing control: 0 = Negated normally 1 = Negated one clock before the cycle finishes

(1) **ROMCS#:KBDCS# strapped for CMD#:**

Bits 7 & 5	**CACS# Pin**	**CMD# Pin**
00	CACS#	DIRTY
01	CACS#	DIRTY
10	DIRTY	CMD#
11	CACS#	CMD#

(1) **ROMCS#:KBDCS# strapped for PCICLK3:**

Bits 7 & 5	**CACS# Pin**	**CMD# Pin**
00	DIRTY	PCICLK3
01	CACS#	PCICLK3
10	DIRTY	PCICLK3
11	CACS#	PCICLK3

SYSCFG 17h			**PCI Cycle Control Register 2**			**Default = 00h**
Reserved	Generate NA# for PCI slave access in async PCICLK mode: 0 = No 1 = Yes	Reserved. Set tto 0.	Reserved	Reserved. Set to 0	Sync SRAM type (if SYSCFG 11h[3] = 1): 0 = Standard 1 = Pipelined	Burst type: 0 = Intel burst protocol 1 = Cyrix linear burst protocol

SYSCFG 18h				**Interface Control Register**			**Default = 00h**
BOFF# generation for retry cycles: 0 = BOFF# generated whenever a retry indication is asserted 1 = BOFF# asserted only if a retry is generated during a Master access. This bit should be set to 1	Drive strength on RAS lines: 0 = 16mA 1 = 4mA	CAS lines voltage selection: 0 = 5.0V 1 = 3.3V	Drive strength on memory address lines: 0 = 4mA 1 = 16mA	Drive strength on write enable line: 0 = 16mA 1 = 20mA	Reserved	Reserved	Suspend mode Refresh fix: 0 = Disable fix 1 = Enable fix

Table B-3 SYSCFG 00h-2Fh (cont.)

7	6	5	4	3	2	1	0
SYSCFG 19h			**Memory Decode Control Register 3**				**Default = 00h**
Pin functionality: 0 = GWE# 1 = RAS5#	Full decode for logical Bank 5 (RAS5#) if SYSCFG 19h[7] is set: 000 = 0Kx36 001 = 256Kx36 (2MB) 010 = 512Kx36 (4MB) 011 = 1Mx36 (8MB)			Bank 4 (RAS4#): 0 = Disable 1 = Enable	Full decode for logical Bank 4 (RAS4#): 000 = 0Kx36 001 = 256Kx36 (2MB) 010 = 512Kx36 (4MB) 011 = 1Mx36 (8MB)	100 = 2Mx36 (16MB) 101 = 4Mx36 (32MB) 110 = 8Mx36 (64MB) 111 = 16Mx36 (128MB)	
SYSCFG 1Ah			**Memory Shadow Control Register 1**				**Default = 00h**
Reserved	Time that CPU is ensured for bus utilization during every 15µs of system operation:(1) 00 = No bandwidth guarantee 01 = 1µs guarantee 10 = 2µs guarantee 11 = 4µs guarantee		C8000h-DFFFFFh shadowing granularity: 0 = 16KB 1 = 8KB	Read and write control of CE000h-CFFFFh for shadowing if SYSCFG 1Ah[4] = 1: 00 = Read/write PCI bus 01 = Read from DRAM/write to PCI 10 = Read from PCI/write to DRAM 11 = Read/write DRAM		Read and write control of CA000h-CBFFFh for shadowing if SYSCFG 1Ah[4] = 1: 00 = Read/write PCI bus 01 = Read from DRAM/write to PCI 10 = Read from PCI/write to DRAM 11 = Read/write DRAM	
(1) Bits [6:5] allow the user to guarantee the CPU a percentage of the total available bus bandwidth. When these bits are programmed, the CPU is ensured of utilization of the bus for up to 4µs of every 15µs of operation of the system. This is achieved by not granting bus ownership to other requesting devices.							
SYSCFG 1Bh			**Memory Shadow Control Register 2**				**Default = 00h**
Read and write control of DE000h-DFFFFh for shadowing if SYSCFG 1Ah[4] = 1: 00 = Read/write PCI bus 01 = Read from DRAM/write to PCI 10 = Read from PCI/write to DRAM 11 = Read/write DRAM		Read and write control of DA000h-DBFFFh for shadowing if SYSCFG 1Ah[4] = 1: 00 = Read/write PCI bus 01 = Read from DRAM/write to PCI 10 = Read from PCI/write to DRAM 11 = Read/write DRAM		Read and write control of D6000h-D7FFFh for shadowing if SYSCFG 1Ah[4] = 1: 00 = Read/write PCI bus 01 = Read from DRAM/write to PCI 10 = Read from PCI/write to DRAM 11 = Read/write DRAM		Read and write control of D2000h-D3FFFh for shadowing if SYSCFG 1Ah[4] = 1: 00 = Read/write PCI bus 01 = Read from DRAM/write to PCI 10 = Read from PCI/write to DRAM 11 = Read/write DRAM	
SYSCFG 1Ch			**EDO DRAM Control Register**				**Default = 00h**
Bank 5: 0 = FPM DRAM 1 = EDO DRAM	Bank 4: 0 = FPM DRAM 1 = EDO DRAM	Bank 3: 0 = FPM DRAM 1 = EDO DRAM	Bank 2: 0 = FPM DRAM 1 = EDO DRAM	Bank 1: 0 = FPM DRAM 1 = EDO DRAM	Bank 0: 0 = FPM DRAM 1 = EDO DRAM	82C700 operating at a frequency of 50MHz:(1) 0 = No 1 = Yes Also see SYSCFG 1Dh[7].	CAS pulse width during DRAM accesses: 0 = CAS pulse width determined by SYSCFG 01h[3] 1 = CAS pulse width is 1 CPUCLK(2)
(1) Bit 1 can be set by the BIOS when FireStar is operating at <= 50MHz. The setting of this bit can improve DRAM access times by allowing X-2-2-2 burst to DRAM even if the user is not using EDO DRAMs, but uses 60ns fast page mode DRAM instead. (2) The width of the pulse is one CPUCLK for read accesses to banks that are populated with EDO DRAMs (selected by bits [7:2]), resulting in X-2-2-2 burst to EDO DRAM at 50/60/66MHz. SYSCFG 14h[7] and PCIDV0 44h[0] must be set in prior to setting this bit. X-2-2-2 burst cycles enabled by this bit apply only during CPU read bursts to EDO DRAM banks that are enabled in SYSCFG 1Ch[7:2].							

Table B-3 SYSCFG 00h-2Fh (cont.)

7	6	5	4	3	2	1	0
SYSCFG 1Dh			**Miscellaneous Control Register 3**				**Default = 00h**
Generate internal HDOE# signal one-half clock earlier during CPU reads from DRAM: 0 = Disable 1 = Enable Only for 50MHz with X-2-2-2 operation.	Reserved. Set to 0.	DWE# timing selection:(1) 0 = Normal 1 = Removed 1 CPUCLK earlier	DRAM read leadoff cycle: 0 = Normal 1 = Reduced by 1 CPUCLK	DMA accesses from system memory: 0 = Enable 1 = Disable	Reserved	Accesses to B0000h-BFFFFh during SMM mode: 0 = Accesses go to main memory 1 = Accesses go to PCI bus	Accesses to A0000h-AFFFFh during SMM mode: 0 = Accesses go to main memory 1 = Accesses go to PCI bus
(1) When using a buffered DWE# solution and the DRAM load is substantial, bit 5 may have to be set if the system begins to malfunction.							
SYSCFG 1Eh			**Control Register**				**Default = 00h**
PCI master read cycle: 0 = Wait for IRDY# to be asserted before asserting TRDY# 1 = Generate TRDY# without checking for the status of IRDY#	Reserved)	Retry PCI pre-snoop HITM# cycle: 0 = Disable 1 = Enable	BOFF# generation if the PCI retry cycle is in 80000h-FFFFFh range: 0 = Not generated 1 = Generated **Note:** Bit 3 must = 1, otherwise the setting of this bit has no effect.	Deadlock situation:(1) 0 = No way to avert deadlock situation if write posting buffer on the PCI-to-PCI bridge has been enabled 1 = BOFF# is asserted to the CPU if deadlock situation occurs	Must be set to 1 to correct glitch on DWE# output pin. This bit works in conjunction with SYSCFG 20h[7].	When set to 1, PCI bursting will be disabled if BE[7:4]# and/or BE[3:0]# are not all 0.	Reserved
(1) In a situation where there is a PCI-to-PCI bridge in a system and that bridge supports write posting, the following deadlock condition can occur. The bridge posts data from a master on the secondary PCI bus into its FIFO. If at the same time the 82C700 is accessing the bridge as a target, then the bridge will tell the 82C700 to retry its request after it has serviced out its FIFO. This will result in a deadlock situation. Bit 3 needs to be set to 1 if an OPTi 82C824 or 82C814 bridge, or a DEC 21050 PCI-to-PCI bridge (or a similar chip) is used.							

Table B-3 SYSCFG 00h-2Fh (cont.)

7	6	5	4	3	2	1	0
SYSCFG 1Fh			**EDO Timing Control Register**				**Default = 00h**
0 = Normal 1 = Generate conflict during EDO detection (bit 6 set) if necessary	0 = Normal (fast page mode) 1 = Detect EDO	NA# generation for burst DRAM accesses: 0 = Aggressive (X-2-2-2-2-2-2-2 if SYSCFG 08h[2] = 1) 1 = Controlled by SYSCFG 08h[2] Also see SYSCFG 11h[4]	DRAM read cycle leadoff reduce: 0 = Normal. Do not reduce leadoff further 1 = Reduce DRAM leadoff further (2) This bit used in conjunction with 1Dh[4]	Reserved	Reserved	PCI write triggering: 0 = Normal 1 = Default Method	0D0000-0DFFFFh is cacheable in L1 and L2:(1) 0 = No 1 = Yes

(1) Before turning on bit 0, 0D0000-0DFFFFh needs to be readable/writable and shadowed. When cached into L1, it will be in writeback mode if SYSCFG 08h[1] = 1. There is no write protection in this region if bit 0 is set.

(2) For EDO, setting this bit reduces the leadoff to 6 CLKs. If SDRAM is being used in the system then both SYSCFG 1Dh[4] and SYSCF 1Fh[4] need to be set to 1 to reduce the leadoff to 7 CLKs

SYSCFG 20h			**DRAM Burst Control Register**				**Default = 00h**
Must be set to 1 to correct glitch on DWE# output pin. This bit works in conjunction with SYSCFG 1Eh[2].	DRAM post write during HITM# cycle during PCI master access: 0 = Disable 1 = Enable	0 = IRDY# inactive for > 3 clocks 1 = Lockup may occur Must be set to 0 to correct lockup if a master IRDY# is not asserted within 3 CLKs after FRAME#.	PCI master parity: 0 = Disable 1 = Enable	DRAM write burst cycle control during PCI master cycles: 00 = Invalid 01 = X-3-3-3 10 = X-2-2-2 11 = X-1-1-1		DRAM read burst cycle control during PCI master cycles: 00 = Invalid 01 = X-3-3-3 10 = X-2-2-2 11 = X-1-1-1	

Table B-3 SYSCFG 00h-2Fh (cont.)

7	6	5	4	3	2	1	0
SYSCFG 21h			**PCI Concurrency Control Register**				**Default = 01h**
Concurrency timer: 0 = Conservative 1 = Aggressive	00 = No concurrency on PCI master and CPU/L2 If SYSCFG 21h[1] = 1, then: X1 = PCI master and CPU/L2 concurrence for PCI write invalid cycles 1X = PCI master and CPU/L2 concurrence for PCI read multiple and read line cycles		Concurrency on PCI master-PCI slave, and CPU/L2/DRAM: 0 = No 1 = Yes	0 = Normal Tag write 1 = If bit 1 is set, always write invalid Tag during linefill	0 = If Tag = 11011111b => invalid combination 1 = If cache size = 256K, Tag = 0000 1100b => invalid combination (C-F0000h). If cache size > 256K, Tag = 10111111b => invalid combination Valid only when bit 1 = 1.	L2 cache write mode during master cycle: 0 = Write-through 1 = Writeback	0 = HOLD/HLDA protocol 1 = BOFF#/AHOLD protocol (Default) Must be set to 1. HOLD/HLDA protocol not supported on FireStar.
SYSCFG 22h			**Inquire Cycle Control Register**				**Default = 00h**
Reserved	Reserved	Must be set to 0 to correct glitch on (internal) HRQ signal.	HRQ is sync to PCICLK: 0 = No 1 = Yes Must = 1 for DDMA operation	0 = No write allocation 1 = CPU single write, L2 miss cache allocation	EADS# generation: 00 = Normal for inquire cycle 01 = 1 CPUCLK earlier 10 = 1 CPUCLK earlier with async clock, 2 CPUCLK earlier with sync clock 11 = Reserved		Inquire cycle to PCI clock synchronization: 0 = Use rising edge only (old mode) 1 = Use rising and falling edges
SYSCFG 23h			**Pre-Snoop Control Register**				**Default = 00h**
Generate internal BREAK signal during master accessing of local memory cycle:(1) 0 = Default Mode 1 = New Mode	Reserved	Pre-snoop for PCI X-1-1-1 write invalidate: 0 = Disable 1 = Enable	Pre-snoop for PCI X-1-1-1 read multiple and read line: 0 = Disable 1 = Enable	Half clock shift of cache hit latching when fast NA is enabled: 0 = Disable 1 = Enable	Reserved	Reserved	Reserved
(1) Default Mode conditions: Sync SRAM, starting address AD[4:2] not = 000 or non-linear mode, master L2 cache write-through. New Mode conditions: Sync SRAM, starting address AD[4:2] not = 000 or non-linear mode, master L2 cache write-through, L2 cache hit.							
SYSCFG 24h			**Asymmetric DRAM Configuration Register**				**Default = 00h**
Logical Bank 3 DRAM type: 00 = Sym DRAM 01 = Asym DRAM - x8 type 10 = Asym DRAM - x9 type 11= Asym DRAM - x10 type		Logical Bank 2 DRAM type: 00 = Sym DRAM 01 = Asym DRAM - x8 type 10 = Asym DRAM - x9 type 11= Asym DRAM - x10 type		Logical Bank 1 DRAM type: 00 = Sym DRAM 01 = Asym DRAM - x8 type 10 = Asym DRAM - x9 type 11= Asym DRAM - x10 type		Logical Bank 0 DRAM type: 00 = Sym DRAM 01 = Asym DRAM - x8 type 10 = Asym DRAM - x9 type 11= Asym DRAM - x10 type	

Table B-3 SYSCFG 00h-2Fh (cont.)

7	6	5	4	3	2	1	0
SYSCFG 25h			**GUI Memory Location Register**				**Default = 00h**
Reserved					Reserved	Reserved	Reserved
SYSCFG 26h			**UMA Control Register 1**				**Default = 00h**
ISA master to DRAM cycle CAS width: 0 = Controlled by ISA R/W command pulse width 1 = 2 PCICLKs This bit is effective only when SYSCFG 0Eh[6] = 1	ISA SA address latch: 0 = SA latch is always transparent (pass-through) 1 = SA latch is on for retry only. (When first CPU/ISA cycle is retried, SA address will be latched.)	Reserved		5-2-2-2 EDO DRAM read timing at 66MHz in a cacheless system: 0 = Disable 1 = Enable	Reserved		Reserved
SYSCFG 27h			**Miscellaneous Control Register 4**				**Default = 00h**
Master to EDO DRAM read cycle controlled by DWE#: 0 = Disable 1 = Enable	Dynamic cache write hit lead-off 3 clock: 0 = Disable 1 = Enable, only valid for 4-X-X-X write hit	PCI master write line invalid cycle HITM# or L2 dirty no stopping: 0 = Disable 1 = Enable	Generate AHOLD at 2nd T2 on CPU single write hit not Dirty cycle: 0 = Disable 1 = Enable	Fast NA# with L2 cache: 0 = Disable 1 = Enable	Non-ISA refresh counter: 000 = Disable, use external refresh pin 001 = Reserved 010 = Reserved 011 = Reserved 100 = 66MHz external CPU clock 101 = 60MHz external CPU clock 110 = 50MHz external CPU clock 111 = 40MHz external CPU clock		
SYSCFG 28h			**SDRAM Control Register 1**				**Default = 00h**
Delay CS#: 0 = Disable 1 = Enable	SDRAM CAS# latency: 001 = 1 ‘010 = 2 011 = 3 All other combinations = Reserved			Write-through: 0 = Sequential 1 = Interleaved	SDRAM burst length control: 000 = 1 010 = 4 All other combinations = Reserved		
SYSCFG 29h			**SDRAM Control Register 2**				**Default = 00h**
Pipeline read: 0 =7-1-1-1-5-1-1-1-1 1 =7-1-1-1-2-1-1-1-1	2N rule: 0 = Disable 1 = Enable	Timing control: **tRP tRAS tMRS** 00 =2 CLK4 CLK3 CLK 01 =4 CLK5 CLK3 CLK 10 =3 CLK6 CLK2 CLK 11 =Rsvd7 CLKRsvd tRP:Precharge time to activate command tRAS:RAS active to precharge command time tMRS:Mode register set cycle time		Bank 3 SDRAM: 0 = Disable 1 = Enable	Bank 2 SDRAM: 0 = Disable 1 = Enable	Bank 1 SDRAM: 0 = Disable 1 = Enable	Bank 0 SDRAM: 0 = Disable 1 = Enable

Table B-3 SYSCFG 00h-2Fh (cont.)

7	6	5	4	3	2	1	0
SYSCFG 2Ah			**PCI-to-DRAM Control Register 1**				**Default = 00h**
Reserved.	Reserved		PCI TRDY# wait state control with PCI-to-DRAM deep buffer: 0 = 0WS (X-1-1-1) 1 = 1WS (X-2-2-2)	Write burst with PCI-to-DRAM deep buffer: 0 = Disable 1 = Enable	Read burst with PCI-to-DRAM deep buffer: 0 = Disable 1 = Enable	Reserved	PCI-to-DRAM deep buffer size: 0 = 16 dword 1 = 24 dword
SYSCFG 2Bh			**PCI-to-DRAM Control Register 2**				**Default = 00h**
Reserved				Reserved			
SYSCFG 2Ch			**CPU-to-DRAM Buffer Control Register**				**Default = 00h**
CPU-to-PCI read and CPU-to-DRAM write concurrency: 0 = Disable 1 = Enable	Reserved.	When set (to 1) along with CPU-to-DRAM buffer and PBSRAM, the DRAM controller will first supply the data to the CPU before writing the previous data back to DRAM during a cache miss dirty cycle.(1)	CPU-to-PCI write and CPU-to-DRAM read concurrency: 0 = Disable 1 = Enable	Enable internal LMEM# during special cycles: 0 = No 1 = Yes	BOFF# assertion during DRAM read cycles: 0 = Disable 1 = Enable	Data merging when CPU owns DRAM bus: 0 = Possible only when GUI owns DRAM bus (UMA feature - not supported) 1 = Always possible	Allow data collection while CPU-to-DRAM FIFO is flushing: 0 = Disable(2) 1 = Enable
(1) Bit 5's function needs the CPU-to-DRAM buffer to be enabled. DRAM processing for the read will start concurrently while data from cache will be written to the CPU-to-DRAM buffer. (2) BOFF# is generated for the next DRAM write cycle as long as there is data in the FIFO.							
SYSCFG 2Dh			**Miscellaneous Control Register 5**				**Default = 00h**
Reserved							

Table B-3 SYSCFG 00h-2Fh (cont.)

7	6	5	4	3	2	1	0
SYSCFG 2Eh			**UMA Control Register 2**				**Default = 00h**
Allow SDRAM self-refresh in Suspend mode: 0 = Disable (SDRAM engages auto-refresh mode) 1 = Enable (need to enable SDRAM self-refresh if SYSCFG 12h[5:4] = 01 or 10)	Allow RFSH# signal from IPC to connect to DRAM controller: 0 = Disable 1 = Enable	TMS/RAS5# mux. 0 = TMS functionality 1 = RAS5# functionality. RAS5# is available of the GWE# signal	0 = Extra half clock CPU hold time for pipeline cycle (Default) 1 = No hold time for pipeline cycle	CPU-to-PCI FIFO control module: 0 = Disable 1 = Enable	Number of address posting: 0 = 6 level 1 = 3 Level	Reserved	Reserved

Table B-3 SYSCFG 00h-2Fh (cont.)

7	6	5	4	3	2	1	0
SYSCFG 2Fh				**UMA Control Register 3**			**Default = 00h**
Column address to CAS delay for page miss cycles: 0 = Default 1 = 1 CLK	See Below	Reserved	See Below		Refresh enabling and refresh ahead control: 000 = Burst refresh disable 001 = Always start with Bank 0, no refresh ahead 010 = Always start with Bank 0, refresh ahead up to 3 011 = Always start with Bank 0, refresh ahead up to 7 100 = Burst refresh disable 101 = Dynamic starting bank, no refresh ahead 110 = Dynamic starting bank, refresh ahead up to 3 111 = Dynamic starting bank, refresh ahead up to 7 **Note:** This feature should never be enabled if SDRAM is being used in the system.		
Bits 6, 4, and 3: Burst mode and length selection 000 = Mode 0, RWM = 5 001 = Mode 1, RWM = 5, BLEN = 2 010 = BLEN = 3 011 = BLEN = 4 100 = Mode 0, RWM = 4 101 = Mode 2, RWM = 4, BLEN = 1 110 = BLEN = 2 111 = BLEN = 3				**RWM:** Refresh request water mark. **BLEN:** Minimum number of refresh cycles in a burst. **Mode 0:** Refresh request is generated at reaching/crossing RWM. Refresh burst is preempted, at the end of current cycle, if high priority GUI request is pending. Refresh burst is preempted once the count drops below RWM if CPU/PCI request is pending. Otherwise the refresh continues until count is zero and then refreshes ahead up to 3/7 refreshes. **Mode 1:** Refresh request is generated at reaching/crossing RWM. Refresh burst is preempted, at the end of current cycle, if high priority GUI request is pending. Refresh burst is preempted, once the count drops below RWM and number of refresh cycle performed is greater or equal to the BLEN, if CPU/PCI request is pending. Otherwise the refresh continues until count is zero and then refreshes ahead up to 3/7 refreshes. **Mode 2:** Refresh request is generated at reaching/crossing RWM. Refresh burst is preempted, at the end of current cycle, if high priority GUI request is pending. Refresh burst is preempted, once number of refresh cycle performed is greater or equal to the BLEN, if CPU request is pending. refresh burst is preempted, once the count drops below RWM and number of refresh cycle performed is greater or equal to the BLEN, if PCI request is pending. Otherwise the refresh continues until count is zero and then refreshes ahead up to 3/7 refreshes.			

Table B-4 SYSCFG 30h-FFh (Power Management)

7	6	5	4	3	2	1	0
SYSCFG 30h-37h			**Reserved**				**Default = 00h**
SYSCFG 38h			**NMI Trap Enable Register 1**				**Default = 00h**
PMI#7 NMI: 0 = Disable 1 = Enable	PMI#6 NMI: 0 = Disable 1 = Enable	PMI#5 NMI: 0 = Disable 1 = Enable	PMI#4 NMI: 0 = Disable 1 = Enable	PMI#3 NMI: 0 = Disable 1 = Enable	PMI#2 NMI: 0 = Disable 1 = Enable	PMI#1 NMI: 0 = Disable 1 = Enable	PMI#0 NMI: 0 = Disable 1 = Enable
SYSCFG 39h			**NMI Trap Enable Register 2**				**Default = 00h**
PMI#15 NMI: 0 = Disable 1 = Enable	PMI#14 NMI: 0 = Disable 1 = Enable	PMI#13 NMI: 0 = Disable 1 = Enable	PMI#12 NMI: 0 = Disable 1 = Enable	PMI#11 NMI: 0 = Disable 1 = Enable	PMI#10 NMI: 0 = Disable 1 = Enable	PMI#9 NMI: 0 = Disable 1 = Enable	PMI#8 NMI: 0 = Disable 1 = Enable
SYSCFG 3Ah			**NMI Trap Enable Register 3**				**Default = 00h**
PMI#23 NMI: 0 = Disable 1 = Enable	PMI#22 NMI: 0 = Disable 1 = Enable	PMI#21 NMI: 0 = Disable 1 = Enable	PMI#20 NMI: 0 = Disable 1 = Enable	PMI#19 NMI: 0 = Disable 1 = Enable	PMI#18 NMI: 0 = Disable 1 = Enable	PMI#17 NMI: 0 = Disable 1 = Enable	PMI#16 NMI: 0 = Disable 1 = Enable
SYSCFG 3Bh			**NMI Trap Enable Register 4**				**Default = 00h**
PMI#31 NMI: 0 = Disable 1 = Enable	PMI#30 NMI: 0 = Disable 1 = Enable	PMI#29 NMI: 0 = Disable 1 = Enable	PMI#28 NMI: 0 = Disable 1 = Enable	PMI#27 NMI: 0 = Disable 1 = Enable	PMI#26 NMI: 0 = Disable 1 = Enable	PMI#25 NMI: 0 = Disable 1 = Enable	PMI#24 NMI: 0 = Disable 1 = Enable
SYSCFG 3Ch			**NMI Trap Enable Register 5**				**Default = 00h**
Reserved		PMI#37 NMI: 0 = Disable 1 = Enable	PMI#36 NMI: 0 = Disable 1 = Enable	PMI#35 NMI: 0 = Disable 1 = Enable	PMI#34 NMI: 0 = Disable 1 = Enable	PMI#33 NMI: 0 = Disable 1 = Enable	PMI#32 NMI: 0 = Disable 1 = Enable
SYSCFG 3Dh-3Fh			**Reserved**				**Default = 00h**
SYSCFG 40h			**PMU Control Register 1**				**Default = 00h**
Reserved	Global timer divide: 0 = ÷1 1 = ÷4	LLOWBAT polarity: 0 = Active high 1 = Active low	LOWBAT polarity: 0 = Active high 1 = Active low	Reserved	EPMI1# polarity: 0 = Active high 1 = Active low	EPMI0# polarity: 0 = Active high 1 = Active low	RSMRST select: 0 = Disable 1 = Enable Allows RESET# and RSTDRV to be generated in Resume.

Table B-4 SYSCFG 30h-FFh (Power Management) (cont.)

7	6	5	4	3	2	1	0
SYSCFG 41h			**DOZE_TIMER Register**				**Default = 00h**
DOZE_0 time-out select: 000 = 2ms 001 = 4ms 010 = 8ms 011 = 32ms 100 = 128ms 101 = 512ms 110 = 2s 111 = 8s Time-out generates PMI#27.			Doze mode STPCLK# modulation (STPCLK# modulated by BCLK defined in SYSCFG E6h[7:6]): 000 = No Modulation (STPCLK# = 1) 001 = STPCLK# t_{hi} = 0.75 * 16 BCLKs 010 = STPCLK# t_{hi} = 0.5 * 16 BCLKs 011 = STPCLK# t_{hi} = 0.25 * 16 BCLKs 100 = STPCLK# t_{hi} = 0.125 * 16 BCLKs 101 = STPCLK# t_{hi} = 0.0625 * 16 BCLKs 110 = STPCLK# t_{hi} = 0.03125 * 32 BCLKs 111 = STPCLK# t_{hi} = 0.015625 * 64 BCLKs			ACCESS events reset Doze mode: 0 = Disable 1 = Enable	Doze control select: 0 = Hardware 1 = Software
SYSCFG 42h if AEh[7] = 0			**Clock Source Register 1**				**Default = 00h**
Clock source for GNR1_TIMER		Clock source for KBD_TIMER		Clock source for DSK_TIMER		Clock source for LCD_TIMER	
SYSCFG 42h if AEh[7] = 1			**Clock Source Register 1A**				**Default = 00h**
Clock source for GNR5_TIMER		Reserved					
SYSCFG 43h			**PMU Control Register 2**				**Default = 00h**
LCD_ACCESS includes I/O range 3B0h-3DFh: 0 = Yes 1 = No	LCD_ACCESS includes memory A0000-BFFFFh: 0 = Yes 1 = No	LOWBAT pin sample rate: 00 = 32s 10 = 128s 01 = 64s 11 = Rsrvd A PMI is generated each time LOWBAT is sampled active.		Reserved			
SYSCFG 44h			**LCD_TIMER Register**				**Default = 00h**
Time count byte for LCD_TIMER: Monitors LCD_ACCESS. Time-out generates PMI#8.							
SYSCFG 45h			**DSK_TIMER Register**				**Default = 00h**
Time count byte for DSK_TIMER: Monitors DSK_ACCESS. Time-out generates PMI#9.							
SYSCFG 46h			**KBD_TIMER Register**				**Default = 00h**
Time count byte for KBD_TIMER: Monitors KBD_ACCESS. Time-out generates PMI#10.							
SYSCFG 47h if AEh[7] = 0			**GNR1_TIMER Register**				**Default = 00h**
Time count byte for GNR1_TIMER: Monitors GNR1_ACCESS. Time-out generates PMI#11.							
SYSCFG 47h if AEh[7] = 1			**GNR5_TIMER Register**				**Default = 00h**
Time count byte for GNR5_TIMER: Monitors GNR5_ACCESS. Time-out generates PMI#11.							
SYSCFG 48h if AEh[7] = 0			**GNR1 Base Address Register**				**Default = 00h**
GNR1_ACCESS base address: A[8:1] (I/O) or A[22:15] (Memory)							
SYSCFG 48h if AEh[7] = 1			**GNR5_Timer Base Address Register**				**Default = 00h**
GNR5_TIMER base address: A[8:1] (I/O)							

Table B-4 SYSCFG 30h-FFh (Power Management) (cont.)

7	6	5	4	3	2	1	0
SYSCFG 49h if AEh[7] = 0			**GNR1 Control Register**				**Default = 00h**
GNR1 base address: A9 (I/O) A23 (Memory)	Write decode: 0 = Disable 1 = Enable	Read decode: 0 = Disable 1 = Enable	GNR1 mask bits for address A[5:1] (I/O) or A[19:15] memory: A 1 in a particular bit means that the corresponding bit at SYSCFG 48h[4:0] is not compared. This is used to determine address block size.				
SYSCFG 49h if AEh[7] = 1			**GNR5_Timer Control Register**				**Default = 00h**
Base address: A9 (I/O)	Write decode: 0 = Disable 1 = Enable	Read decode: 0 = Disable 1 = Enable	GNR5 base address A[5:1] (I/O)				
SYSCFG 4Ah			**Chip Select 0 Base Address Register**				**Default = 00h**
GPCS0# base address: A[8:1] (I/O) or A[22:15] (Memory)							
SYSCFG 4Bh			**Chip Select 0 Control Register**				**Default = 00h**
GPCS0# base address: A9 (I/O) A23 (Memory)	Write decode: 0 = Disable 1 = Enable	Read decode: 0 = Disable 1 = Enable	Chip select active: 0 = w/Cmd 1 = Before ALE	GPCS0# mask bits for address A[4:1] (I/O) or A[18:15] memory: A 1 in a particular bit means that the corresponding bit at SYSCFG 4Ah[3:0] is not compared. This is used to determine address block size.			
SYSCFG 4Ch			**Chip Select 1 Base Address Register**				**Default = 00h**
GPCS1# base address: A[8:1] (I/O) or A[22:15] (Memory)							
SYSCFG 4Dh			**Chip Select 1 Control Register**				**Default = 00h**
GPCS1# base address: A9 (I/O) A23 (Memory)	Write decode: 0 = Disable 1 = Enable	Read decode: 0 = Disable 1 = Enable	Chip select active: 0 = w/Cmd 1 = before ALE	GPCS1# mask bits for address A[4:1] (I/O) or A[18:15] memory: A 1 in a particular bit means that the corresponding bit at SYSCFG 4Ch[3:0] is not compared. This is used to determine address block size.			
SYSCFG 4Eh if AEh[7] = 0			**Idle Reload Event Enable Register 1**				**Default = 00h**
GPCS1#_ ACCESS: 0 = Disable 1 = Enable	GPCS0#_ ACCESS: 0 = Disable 1 = Enable	LPT_ ACCESS: 0 = Disable 1 = Enable	GNR3_ ACCESS: 0 = Disable 1 = Enable	GNR1_ ACCESS: 0 = Disable 1 = Enable	KBD_ ACCESS: 0 = Disable 1 = Enable	DSK_ ACCESS: 0 = Disable 1 = Enable	LCD_ ACCESS: 0 = Disable 1 = Enable
SYSCFG 4Eh if AEh[7] = 1			**Idle Reload Event Enable Register 1A**				**Default = 00h**
Reserved			GNR7: 0 = Disable 1 = Enable	GNR5: 0 = Disable 1 = Enable	Reserved	Any PCI requests: 0 = Disable 1 = Enable	Reserved
SYSCFG 4Fh			**IDLE_TIMER Register**				**Default = 00h**
Time count byte for IDLE_TIMER: Monitors selected IRQs and EPMIs. Time-out generates PMI#4.							

Table B-4 SYSCFG 30h-FFh (Power Management) (cont.)

7	6	5	4	3	2	1	0
SYSCFG 50h			**PMU Control Register 3**				**Default = 00h**
Software start SMI: 0 = Clear SMI 1 = Start SMI	Reserved	IRQ8 polarity: 0 = Active low 1 = Active high	14.3MHz to 82C700: 0 = Enable 1 = Disable	Write = 1 to start Doze Read = Doze status: 0 = Counting 1 = Timed out	Ready to Resume (RO): 0 = Not in Resume 1 = Ready to Resume	PMU mode (RO): 0 = Nothing pending 1 = Suspend active (clear PMI#6)	Start Suspend (WO): 1 = Enter Suspend mode
SYSCFG 51h			**Beeper Control Register**				**Default = 00h**
Reserved						Beeper control: 00 = No Action 01 = 1kHz 10 = Off 11 = 2kHz	
SYSCFG 52h			**Scratchpad Register 1**				**Default = 00h**
General purpose storage byte: - For CISA Configuration Cycles: Data phase information, low byte							
SYSCFG 53h			**Scratchpad Register 2**				**Default = 00h**
General purpose storage byte. - For CISA Configuration Cycles: Data phase information, high byte							
SYSCFG 54h			**Power Control Latch Register 1**				**Default = 00h**
Enable [3:0] to write latch lines PPWR[3:0]: 0 = Disable 1 = Enable				Read/write data bits for PPWR[3:0]: 0 = Latch output low 1 = Latch output high			
SYSCFG 55h			**Power Control Latch Register 2**				**Default = 0Fh**
Enable [3:0] to write latch lines PPWR[7:4]: 0 = Disable 1 = Enable				Read/write data bits for PPWR[7:4] (Default = 1111): 0 = Latch output low 1 = Latch output high			
SYSCFG 56h			**Reserved**				**Default = 00h**
SYSCFG 57h			**PMU Control Register 4**				**Default = 08h**
Reserved	INTRGRP generates PMI#6: 0 = Disable 1 = Enable	DSK_ACCESS includes FDD: 0 = Yes 1 = No	DSK_ACCESS includes HDD: 0 = Yes 1 = No	LCD video area includes A and B segments: 0 = Disable 1 = Enable	LCD video frame buffer area, use PCIDV0 41h[7:0] and 40h[7:6]: 0 = Disable 1 = Enable	Reserved	

Table B-4 SYSCFG 30h-FFh (Power Management) (cont.)

7	6	5	4	3	2	1	0
SYSCFG 58h			**PMU Event Register 1**				**Default = 00h**
LOWBAT PMI#3 SMI: 00 = Disable 11 = Enable		EPMI1# PMI#2 SMI: 00 = Disable 11 = Enable		EPMI0# PMI#1 SMI: 00 = Disable 11 = Enable		LLOWBAT PMI#0 SMI: 00 = Disable 11 = Enable	
SYSCFG 59h			**PMU Event Register 2**				**Default = 00h**
Allow software SMI: 0 = Disable 1 = Enable	Reload timers on Resume: 0 = No 1 = Yes	Resume INTRGRP PMI#6, Suspend PMI#7 SMI: 00 = Disable 11 = Enable		R_TIMER PMI#5 SMI: 00 = Disable 11 = Enable		IDLE_TIMER PMI#4 SMI: 00 = Disable 11 = Enable	
SYSCFG 5Ah if AEh[7] = 0			**PMU Event Register 3**				**Default = 00h**
GNR1_TIMER PMI#11 GNR1_ACCESS PMI#15: 00 = Disable 01 = Positive decode 10 = Positive decode, SMI 11 = SMI		KBD_TIMER PMI#10 KBD_ACCESS PMI#14: 00 = Disable 01 = Positive decode 10 = Positive decode, SMI 11 = SMI		DSK_TIMER PMI#9 DSK_ACCESS PMI#13: 00 = Disable 01 = Positive decode 10 = Positive decode, SMI 11 = SMI		LCD_TIMER PMI#8 LCD_ACCESS PMI#12: 00 = Disable 01 = Reserved 10 = Reserved 11 = SMI	
SYSCFG 5Ah if AEh[7] = 1			**PMU Event Register 3A**				**Default = 00h**
GNR5_TIMER PMI: 00 = Disable 01 = Positive decode 10 = Positive decode, SMI 11 = SMI		Reserved					
SYSCFG 5Bh if AEh[7] = 0			**PMU Event Register 4**				**Default = 00h**
Reserved	Global SMI control: 0 = Allow 1 = Mask	Reserved		GNR1 Next Access PMI#15: 0 = Disable 1 = Enable	KBD Next Access PMI#14: 0 = Disable 1 = Enable	DSK Next Access PMI#13: 0 = Disable 1 = Enable	LCD Next Access PMI#12: 0 = Disable 1 = Enable
SYSCFG 5Bh if AEh[7] = 1			**PMU Event Register 4A**				**Default = 00h**
Reserved				GNR5 Next Access PMI#15: 0 = Disable 1 = Enable	Reserved		
SYSCFG 5Ch			**PMI SMI Source Register 1 (Write 1 to Clear)**				**Default = 00h**
PMI#7, Suspend: 0 = Not Active 1 = Active	PMI#6, Resume or INTRGRP: 0 = Not Active 1 = Active	PMI#5, R_TIMER time-out: 0 = Not Active 1 = Active	PMI#4, IDLE_TIMER time-out: 0 = Not Active 1 = Active	PMI#3, LOWBAT: 0 = Not Active 1 = Active	PMI#2, EPMI1#: 0 = Not Active 1 = Active	PMI#1, EPMI0#: 0 = Not Active 1 = Active	PMI#0, LLOWBAT: 0 = Not Active 1 = Active
SYSCFG 5Dh if AEh[7] = 0			**PMI SMI Source Register 2 (Write 1 to Clear)**				**Default = 00h**
PMI#15, GNR1_ ACCESS: 0 = None 1 = Active	PMI#14, KBD_ACCESS: 0 = Not Active 1 = Active	PMI#13, DSK_ACCESS: 0 = Not Active 1 = Active	PMI#12, LCD_ACCESS: 0 = Not Active 1 = Active	PMI#11, GNR1_TIMER: 0 = Not Active 1 = Active	PMI#10, KBD_TIMER: 0 = Not Active 1= Active	PMI#9, DSK_TIMER: 0 = Not Active 1 = Active	PMI#8, LCD_TIMER: 0 = Not Active 1 = Active

Table B-4 SYSCFG 30h-FFh (Power Management) (cont.)

7	6	5	4	3	2	1	0
SYSCFG 5Dh if AEh[7] = 1			**PMI SMI Source Register 2A (Write 1 to Clear)**				**Default = 00h**
PMI#15, GNR5_ ACCESS: 0 = None 1 = Active	Reserved			PMI#11 GNR5_TIMER: 0 = None 1 = Active	Reserved		
SYSCFG 5Eh			**Reserved**				**Default = 00h**
SYSCFG 5Fh			**PMU Control Register 5**				**Default = 00h**
LCD_ACCESS includes ISA bus video access: 0 = Yes 1 = No	LCD_ACCESS includes local (PCI) bus video access: 0 = No 1 = Yes	RSMGRP IRQs can Resume system: 0 = No 1 = Yes	Transitions on RINGI can Resume system: 0 = No 1 = Yes	Number of RINGI transitions to cause Resume			
SYSCFG 60h			**R_Timer Count Register**				**Default = 00h**
Read R_Timer original count							
SYSCFG 61h			**Debounce Register**				**Default = 00h**
LOWBAT, LLOWBAT debounce rate select: 00 = No debounce 01 = 250µs 10 = 8ms 11 = 500ms		SUS/RES# debounce rate select: 00 = Active low, edge-trig'd PMI 01 = Active low, level-controlled PMI 10 = Active high, level-sampled PMI in 16ms 11 = Active high, level-sampled PMI in 32ms (See Section 4.14.5.2 "SUS/ RES# and RINGI Events" in the databook)		PPWR0 auto-toggle in APM STPCLK mode: 0 = No PPWR0 auto-toggle 1 = Auto-toggle PPWR0 on entry & exit from APM STPCLK mode	STPCLK# signal 0 = Disable 1 = Enable	APM STPCLK recovery time: 00 = 120µs 01 = 240µs 10 = 1ms 11 = 2ms	
SYSCFG 62h			**IRQ Doze Register 1**				**Default = 00h**
IRQ13 Doze reset: 0 = Disable 1 = Enable	IRQ8 Doze reset: 0 = Disable 1 = Enable	IRQ7 Doze reset: 0 = Disable 1 = Enable	IRQ12 Doze reset: 0 = Disable 1 = Enable	IRQ5 Doze reset: 0 = Disable 1 = Enable	IRQ4 Doze reset: 0 = Disable 1 = Enable	IRQ3 Doze reset: 0 = Disable 1 = Enable	IRQ0 Doze reset: 0 = Disable 1 = Enable
SYSCFG 63h			**Idle Time-Out Select Register 1 (WO)**				**Default = 00h**
EPMI0# Level-trig'd: 0 = Disable 1 = Enable	IRQ13: 0 = Disable 1 = Enable	IRQ8: 0 = Disable 1 = Enable	IRQ7: 0 = Disable 1 = Enable	IRQ5: 0 = Disable 1 = Enable	IRQ4: 0 = Disable 1 = Enable	IRQ3: 0 = Disable 1 = Enable	IRQ0: 0 = Disable 1 = Enable
SYSCFG 64h			**INTRGRP IRQ Select Register 1**				**Default = 00h**
IRQ14: 0 = Disable 1 = Enable	IRQ8: 0 = Disable 1 = Enable	IRQ7: 0 = Disable 1 = Enable	IRQ6: 0 = Disable 1 = Enable	IRQ5: 0 = Disable 1 = Enable	IRQ4: 0 = Disable 1 = Enable	IRQ3: 0 = Disable 1 = Enable	IRQ1: 0 = Disable 1 = Enable

Table B-4 SYSCFG 30h-FFh (Power Management) (cont.)

7	6	5	4	3	2	1	0
SYSCFG 65h			**Doze Register**				**Default = 00h**
All interrupts to CPU reset Doze mode: 0 = Disable 1 = Enable	Reserved	EPMI0# Doze reset: 0 = Disable 1 = Enable	Recognize SMI during STPCLK#: 0 = No 1 = Yes	IRQ1 Doze reset: 0 = Disable 1 = Enable	EPMI3# Doze reset: 0 = Disable 1 = Enable	EPMI2# Doze reset: 0 = Disable 1 = Enable	EPMI1# Doze reset: 0 = Disable 1 = Enable
SYSCFG 66h			**PMU Control Register 6**				**Default = 00h**
Suspend-to-Normal refresh delay: 0 = None 1 = Three 32KHz CLKs Write to 1 always.	Suspend mode ATCLK frequency: 0 = Derived from PCICLK 1 = 32KHz Setting can be overridden by SYSCFG 79h[0]	Doze type: 0 = Modulate STPCLK# 1 = Keep STPCLK# asserted	Reserved	APM PPWR0 auto-toggle refresh control: 00 = Normal refresh 01 = Refresh pulse is 32KHz 10 = Refresh pulse is 32KHz and engage suspend type DRAM refresh 11 = Reserved Not supported.		Hot docking refresh control. 0 = Normal refresh 1= Refresh pulse is 32KHz and engage Suspend type DRAM refresh Not supported.	STPGNT cycle wait option: 0 = Do not wait 1 = Wait for STPGNT cycle before negating STPCLK#
SYSCFG 67h			**PMU Control Register 7**				**Default = 00h**
Reserved				Prevent STPCLK# generation by SYSCFG 50h[3] when INTR is active: 0 = Disable 1 = Enable	Normal mode STPCLK# modulation (read returns current STPCLK modulation setting only; STPCLK# modulated by BCLK defined in SYSCFG E6h[7:6]): 000 = No Modulation (STPCLK# = 1) 001 = STPCLK# t_{hi} = 0.75 * 16 BCLKs 010 = STPCLK# t_{hi} = 0.5 * 16 BCLKs 011 = STPCLK# t_{hi} = 0.25 * 16 BCLKs 100 = STPCLK# t_{hi} = 0.125 * 16 BCLKs 101 = STPCLK# t_{hi} = 0.0625 * 16 BCLKs 110 = STPCLK# t_{hi} = 0.03125 * 32 BCLKs 111 = STPCLK# t_{hi} = 0.015625 * 64 BCLKs			
SYSCFG 68h			**Clock Source Register 2**				**Default = 00h**
Clock source for R_TIMER		Clock source for IDLE_TIMER		Resume recovery time: 00 = 8ms 10 = 128ms 01 = 32ms 11 = 30µs **Note:** Ignored if BEh[0] = 1.		PPWR[1:0] auto-toggle on entry and exit from Suspend: 0 = Disable 1 = Enable	
SYSCFG 69h			**R_TIMER Register**				**Default = 00h**
- Time count byte for R_TIMER - starts to count after a non-zero write to this register. - Unlike the other timer registers, a read from this register returns the **current** count. - Time-out generates PMI#5.							
SYSCFG 6Ah			**RSMGRP IRQ Register 1**				**Default = 00h**
EPMI1# Resume: 0 = Disable 1 = Enable	EPMI0# Resume: 0 = Disable 1 = Enable	IRQ8 Resume: 0 = Disable 1 = Enable	IRQ7 Resume: 0 = Disable 1 = Enable	IRQ5 Resume: 0 = Disable 1 = Enable	IRQ4 Resume: 0 = Disable 1 = Enable	IRQ3 Resume: 0 = Disable 1 = Enable	IRQ1 Resume: 0 = Disable 1 = Enable

Table B-4 SYSCFG 30h-FFh (Power Management) (cont.)

7	6	5	4	3	2	1	0
SYSCFG 6Bh			**Resume Source Register**				**Default = 00h**
DRAM Suspend mode refresh type: 0 = Slow refresh (normal) 1 = Self-refresh	PREQ# caused Resume (RO): 0 = No 1 = Yes	CLKRUN# caused Resume (RO): 0 = No 1 = Yes	Reserved: Write as read.	CISA SEL#/ATB# low caused Resume (RO): 0 = No 1 = Yes	SUSP/RSM caused Resume (RO): 0 = No 1 = Yes	RSMGRP caused Resume (RO): 0 = No 1 = Yes	RI caused Resume (RO): 0 = No 1 = Yes
SYSCFG 6Ch			**Scratchpad Register 3**				**Default = 00h**
General purpose storage byte - For CISA Configuration Cycles: Address phase 1 information, low byte							
SYSCFG 6Dh			**Scratchpad Register 4**				**Default = 00h**
General purpose storage byte - For CISA Configuration Cycles: Address phase 1 information, high byte							
SYSCFG 6Eh			**Scratchpad Register 5**				**Default = 00h**
General purpose storage byte - For CISA Configuration Cycles: Address phase 2 information, low byte							
SYSCFG 6Fh			**Scratchpad Register 6**				**Default = 00h**
General purpose storage byte - For CISA Configuration Cycles: Address phase 2 information, high byte							
SYSCFG 70h			**GNR1 Base Address Register 1**				**Default = 00h**
GNR1_ACCESS base address: A[13:6] for memory watchdog or A[15:10] for I/O (right-aligned).							
SYSCFG 71h			**GNR1 Control Register 1**				**Default = FFh**
GNR1_ACCESS mask bits: Mask for A[13:6] for memory watchdog or mask for A[15:10] for I/O (right-aligned).							
SYSCFG 72h			**GNR1 Control Register 2**				**Default = 00h**
GNR1_ACCESS base address: A[5:2] for memory watchdog or ignored for I/O.				GNR1_ACCESS mask bits: Mask for A[5:2] for memory watchdog or mask for A[9:6] for I/O.			
SYSCFG 73h			**GNR2 Base Address Register 1**				**Default = 00h**
GNR2_ACCESS base address: A[13:6] for memory watchdog or A[15:10] for I/O (right-aligned).							
SYSCFG 74h			**GNR2 Control Register 1**				**Default = FFh**
GNR2_ACCESS mask bits: Mask for A[13:6] for memory watchdog or mask for A[15:10] for I/O (right-aligned).							
SYSCFG 75h			**GNR2 Control Register 2**				**Default = 00h**
GNR2_ACCESS base address: A[5:2] for memory watchdog or ignored for I/O.				GNR2_ACCESS mask bits: Mask for A[5:2] for memory watchdog or mask for A[9:6] for I/O.			

Table B-4 SYSCFG 30h-FFh (Power Management) (cont.)

7	6	5	4	3	2	1	0
SYSCFG 76h if AEh[7] = 0			**Doze Reload Select Register 1**				**Default = 0Fh**
LCD_ ACCESS: 0 = DOZE_0 1 = DOZE_1	KBD_ ACCESS: 0 = DOZE_0 1 = DOZE_1	DSK_ ACCESS: 0 = DOZE_0 1 = DOZE_1	HDU_ ACCESS: 0 = DOZE_0 1 = DOZE_1	COM1&2_ ACCESS: 0 = DOZE_0 1 = DOZE_1	LPT_ ACCESS: 0 = DOZE_0 1 = DOZE_1	GNR1_ ACCESS: 0 = DOZE_0 1 = DOZE_1	GNR2_ ACCESS: 0 = DOZE_0 1 = DOZE_1
SYSCFG 76h if AEh[7] = 1			**Doze Reload Select Register 1A**				**Default = 03h**
Reserved		PREQ#: 0 = DOZE_0 1 = DOZE_1	CLKRUN#: 0 = DOZE_0 1 = DOZE_1	Reserved		GNR5: 0 = DOZE_0 1 = DOZE_1	GNR6: 0 = DOZE_0 1 = DOZE_1
SYSCFG 77h			**Doze Reload Select Register 2**				**Default = 00h**
IRQ8: 0 = DOZE_0 1 = DOZE_1	IRQ7: 0 = DOZE_0 1 = DOZE_1	IRQ6: 0 = DOZE_0 1 = DOZE_1	IRQ5: 0 = DOZE_0 1 = DOZE_1	IRQ4: 0 = DOZE_0 1 = DOZE_1	IRQ3: 0 = DOZE_0 1 = DOZE_1	IRQ1: 0 = DOZE_0 1 = DOZE_1	IRQ0: 0 = DOZE_0 1 = DOZE_1
SYSCFG 78h			**Doze Reload Select Register 3**				**Default = 00h**
PCI: 0 = DOZE_0 1 = DOZE_1	IRQ15: 0 = DOZE_0 1 = DOZE_1	IRQ14: 0 = DOZE_0 1 = DOZE_1	IRQ13: 0 = DOZE_0 1 = DOZE_1	IRQ12: 0 = DOZE_0 1 = DOZE_1	IRQ11: 0 = DOZE_0 1 = DOZE_1	IRQ10: 0 = DOZE_0 1 = DOZE_1	IRQ9: 0 = DOZE_0 1 = DOZE_1
SYSCFG 79h			**PMU Control Register 8**				**Default = 00h**
DOZE_1 time-out select: 000 = No delay (Default) 001 = 1ms 010 = 4ms 011 = 16ms 100 = 64ms 101 = 256ms 110 = 1s 111 = 4s			PMI# event triggers exit from Doze mode if the PMI event is enabled to generate SMI:(1) 0 = No 1 = Yes	Reserved	PREQ# wake up Suspend: 0 = Disable 1 = Enable	CLKRUN# wake up Suspend: 0 = Disable 1 = Enable	ATCLK during Suspend: 0 = Run 1 = Stopped (overrides SYSCFG 66h[6])

(1) For example, to let PMI#11 reset the Doze mode without generating SMI to the CPU, SYSCFG 5Ah[7:6] must = 11 and SYSCFG 5Bh[6] must = 1.

SYSCFG 7Ah **GNR3 Base Address Register 1** **Default = 00h**

GNR3_ACCESS base address: A[13:6] for memory watchdog or A[15:10] for I/O (right-aligned).

SYSCFG 7Bh **GNR3 Control Register 1** **Default = FFh**

GNR3_ACCESS mask bits: Mask for A[13:6] for memory watchdog or mask for A[15:10] for I/O (right-aligned).

SYSCFG 7Ch **GNR3 Control Register 2** **Default = 00h**

GNR3_ACCESS base address: A[5:2] for memory watchdog or ignored for I/O.	GNR3_ACCESS mask bits: Mask for A[5:2] for memory watchdog or mask for A[9:6] for I/O.

SYSCFG 7Dh **GNR4 Base Address Register 1** **Default = 00h**

GNR4_ACCESS base address: A[13:6] for memory watchdog or A[15:10] for I/O (right-aligned).

SYSCFG 7Eh **GNR4 Control Register 1** **Default = FFh**

GNR4_ACCESS mask bits: Mask for A[13:6] for memory watchdog or mask for A[15:10] for I/O (right-aligned).

Table B-4 SYSCFG 30h-FFh (Power Management) (cont.)

7	6	5	4	3	2	1	0
SYSCFG 7Fh			**GNR4 Control Register 2**				**Default = 00h**
GNR4_ACCESS base address: A[5:2] for memory watchdog or ignored for I/O.				GNR4_ACCESS mask bits: Mask for A[5:2] for memory watchdog or mask for A[9:6] for I/O.			
SYSCFG 80h			**ICW1 Shadow Register for INTC1**				**Default = 00h**
SYSCFG 81h			**ICW2 Shadow Register for INTC1**				**Default = 00h**
SYSCFG 82h			**ICW3 Shadow Register for INTC1**				**Default = 00h**
SYSCFG 83h			**ICW4 Shadow Register for INTC1**				**Default = 00h**
SYSCFG 84h			**DMA In-Progress Register (RO)**				**Default = 00h**
Ch. 7 DMA in progress: 0 = No 1 = Possibly	Ch. 6 DMA in progress: 0 = No 1 = Possibly	Ch. 5 DMA in progress: 0 = No 1 = Possibly	DMAC2 byte pointer flip-flop. 0 = Cleared 1 = Set	Ch. 3 DMA in progress: 0 = No 1 = Possibly	Ch. 2 DMA in progress: 0 = No 1 = Possibly	Ch. 1 DMA in progress: 0 = No 1 = Possibly	Ch. 0 DMA in progress: 0 = No 1 = Possibly
SYSCFG 85h			**OCW2 Shadow Register for INTC1**				**Default = 00h**
SYSCFG 86h			**OCW3 Shadow Register for INTC1**				**Default = 00h**
SYSCFG 87h			**Reserved**				**Default = 00h**
SYSCFG 88h			**ICW1 Shadow Register for INTC2**				**Default = 00h**
SYSCFG 89h			**ICW2 Shadow Register for INTC2**				**Default = 00h**
SYSCFG 8Ah			**ICW3 Shadow Register for INTC2**				**Default = 00h**
SYSCFG 8Bh			**ICW4 Shadow Register for INCT2**				**Default = 00h**
SYSCFG 8Ch			**Reserved**				**Default = 00h**
SYSCFG 8Dh			**OCW2 Shadow Register for INTC2**				**Default = 00h**
SYSCFG 8Eh			**OCW3 Shadow Register for INTC2**				**Default = 00h**
SYSCFG 8Fh			**Reserved**				**Default = 00h**
SYSCFG 90h			**Timer Channel 0 Low Byte Register: A[7:0]**				**Default = 00h**
SYSCFG 91h			**Timer Channel 0 High Byte Register: A[15:8]**				**Default = 00h**
SYSCFG 92h			**Timer Channel 1 Low Byte Register: A[7:0]**				**Default = 00h**
SYSCFG 93h			**Timer Channel 1 High Byte Register: A[15:8]**				**Default = 00h**
SYSCFG 94h			**Timer Channel 2 Low Byte Register: A[7:0]**				**Default = 00h**
SYSCFG 95h			**Timer Channel 2 High Byte Register: A[15:8]**				**Default = 00h**

Table B-4 SYSCFG 30h-FFh (Power Management) (cont.)

7	6	5	4	3	2	1	0
SYSCFG 96h			**Write Counter High/Low Byte Latch (RO)**				**Default = xxh**
Unused	Unused	Timer Ch. 2 read LSB toggle bit	Timer Ch. 1 read LSB toggle bit	Timer Ch. 0 read LSB toggle bit	Timer Ch. 2 write LSB toggle bit	Timer Ch. 1 write LSB toggle bit	Timer Ch. 0 write LSB toggle bit
SYSCFG 97h			**Reserved**				**Default = 00h**
SYSCFG 98h			**RTC Index Shadow Register (RO)**				**Default = xxh**
NMI enable setting	CMOS RAM Index last written						
SYSCFG 99h			**Interrupt Request Register for INCT1 (RO)**				**Default = xxh**
IRQ7 pending: 0 = No 1 = Yes	IRQ6 pending: 0 = No 1 = Yes	IRQ5 pending: 0 = No 1 = Yes	IRQ4 pending: 0 = No 1 = Yes	IRQ3 pending: 0 = No 1 = Yes	IRQ2 pending: 0 = No 1 = Yes	IRQ1 pending: 0 = No 1 = Yes	IRQ0 pending: 0 = No 1 = Yes
SYSCFG 9Ah			**Interrupt Request Register for INCT2 (RO)**				**Default = xxh**
IRQ15 pending: 0 = No 1 = Yes	IRQ14 pending: 0 = No 1 = Yes	IRQ13 pending: 0 = No 1 = Yes	IRQ12 pending: 0 = No 1 = Yes	IRQ11 pending: 0 = No 1 = Yes	IRQ10 pending: 0 = No 1 = Yes	IRQ9 pending: 0 = No 1 = Yes	IRQ8 pending: 0 = No 1 = Yes
SYSCFG 9Bh			**3F2h + 3F7h Shadow Register**				**Default = 00h**
Shadows 3F2h[7] “Mode Select” bit	Shadows 3F7h[1] “Disk Type” bit 1	Shadows 3F2h[5] “Drive 2 Motor” bit	Shadows 3F2h[4] “Drive 1 Motor” bit	Shadows 3F2h[3] “DMA Enable” bit	Shadows 3F2h[2] “Soft Reset” bit	Shadows 3F7h[0] “Disk Type” bit 0	Shadows 3F2h[0] “Drive Select” bit
SYSCFG 9Ch			**372h + 377h Shadow Register**				**Default = 00h**
Shadows 372h[7] “Mode Select” bit	Shadows 377h[1] “Disk Type” bit 1	Shadows 372h[5] “Drive 2 Motor” bit	Shadows 372h[4] “Drive 1 Motor” bit	Shadows 372h[3] “DMA Enable” bit	Shadows 372h[2] “Soft Reset” bit	Shadows 377h[0] “Disk Type” bit 0	Shadows 372h[0] “Drive Select” bit
SYSCFG 9Dh-9Eh			**Reserved**				**Default = 00h**
SYSCFG 9Fh			**Port 064h Shadow Register**				**Default = 00h**
Shadows I/O writes to Port 064h bits [7:0] (regardless of whether KBDCS# is inhibited). - In this way, when an SMI occurs between a Port 064h write and the subsequent write to Port 060h, SMM code can access the keyboard controller as needed and then simply restore the Port 064h value just before leaving SMM.							
SYSCFG A0h			**Feature Control Register 1**				**Default = 80h**
16-bit I/O decoding: 0 = Disable 1 = Enable	Reserved						
SYSCFG A1h			**Feature Control Register 2**				**Default = 00h**
Reserved					Emerg. over-temp sense: 0 = Disable 1 = Enable	Reserved	EPMI[1:0]# status latch: 0 = Dynamic 1 = Latched

Table B-4 SYSCFG 30h-FFh (Power Management) (cont.)

7	6	5	4	3	2	1	0
SYSCFG A2h if AEh[7] = 0			**IRQ Doze Register 2**				**Default = 00h**
PCI bus I/O access Doze reset: 0 = Disable 1 = Enable	PCI memory access Doze reset: 0 = Disable 1 = Enable	IRQ15 Doze reset: 0 = Disable 1 = Enable	IRQ14 Doze reset: 0 = Disable 1 = Enable	IRQ11 Doze reset: 0 = Disable 1 = Enable	IRQ10 Doze reset: 0 = Disable 1 = Enable	IRQ9 Doze reset: 0 = Disable 1 = Enable	IRQ6 Doze reset: 0 = Disable 1 = Enable
SYSCFG A2h if AEh[7] = 1			**IRQ Doze Register 2A**				**Default = 00h**
PREQ# Doze reset: 0 = Disable 1 = Enable	CLKRUN# Doze reset: 0 = Disable 1 = Enable	Reserved					
SYSCFG A3h			**Idle Time-Out Select Register 2 (WO)**				**Default = 00h**
IRQ15: 0 = Disable 1 = Enable	IRQ14: 0 = Disable 1 = Enable	IRQ12: 0 = Disable 1 = Enable	IRQ11: 0 = Disable 1 = Enable	IRQ10: 0 = Disable 1 = Enable	IRQ9: 0 = Disable 1 = Enable	IRQ6: 0 = Disable 1 = Enable	IRQ1: 0 = Disable 1 = Enable
SYSCFG A4h			**INTRGRP IRQ Select Register 2**				**Default = 00h**
Test Bit: Write as 0	IRQ15: 0 = Disable 1 = Enable	IRQ13: 0 = Disable 1 = Enable	IRQ12: 0 = Disable 1 = Enable	IRQ11: 0 = Disable 1 = Enable	IRQ10: 0 = Disable 1 = Enable	IRQ9: 0 = Disable 1 = Enable	IRQ0: 0 = Disable 1 = Enable
SYSCFG A5h			**Thermal Management Register 1**				**Default = 00h**
Thermal Mgmt.: 0 = Disable 1 = Enable	TEMPDET Variation - As temperature increases, frequency: 0 = Decreases 1 = Increases	Level 2 STPCLK# modulation rate - Sets the stop clock throttling rate when temperature enters second (overtemp) range: 000 = No modulation (STPCLK# = 1) 001 = STPCLK# t_{hi} = 0.75 * 16 BCLKs 010 = STPCLK# t_{hi} = 0.5 * 16 BCLKs 011 = STPCLK# t_{hi} = 0.25 * 16 BCLKs 100 = STPCLK# t_{hi} = 0.125 * 16 BCLKs 101 = STPCLK# t_{hi} = 0.0625 * 16 BCLKs 110 = STPCLK# t_{hi} = 0.03125 * 32 BCLKs 111 = STPCLK# t_{hi} = 0.015625 * 64 BCLKs			Level 1 STPCLK# modulation rate - Sets the stop clock throttling rate when temperature enters first (high temp) range: 000 = No modulation (STPCLK# = 1) 001 = STPCLK# t_{hi} = 0.75 * 16 BCLKs 010 = STPCLK# t_{hi} = 0.5 * 16 BCLKs 011 = STPCLK# t_{hi} = 0.25 * 16 BCLKs 100 = STPCLK# t_{hi} = 0.125 * 16 BCLKs 101 = STPCLK# t_{hi} = 0.0625 * 16 BCLKs 110 = STPCLK# t_{hi} = 0.03125 * 32 BCLKs 111 = STPCLK# t_{hi} = 0.015625 * 64 BCLKs		
Note: Once thermal management has been enabled (bit 7 = 1), none of the thermal management registers can be overwritten.							
SYSCFG A6h			**Thermal Management Register 2**				**Default = 00h**
LOFREQ[7:0]: Low frequency limit low byte							
SYSCFG A7h			**Thermal Management Register 3**				**Default = 00h**
LOFREQ[15:8]: Low frequency limit high byte							
SYSCFG A8h			**Thermal Management Register 4**				**Default = 00h**
HIFREQ[7:0]: High frequency limit low byte							
SYSCFG A9h			**Thermal Management Register 5**				**Default = 00h**
HIFREQ[15:8]: High frequency limit high byte							

Table B-4 SYSCFG 30h-FFh (Power Management) (cont.)

7	6	5	4	3	2	1	0
SYSCFG AAh			**Thermal Management Register 6**				**Default = 00h**
Emergency Overtemp Sensor STPCLK# Modulation Rate: 000 = No modulation (STPCLK# = 1) 001 = STPCLK# t_{hi} = 0.75 * 16 BCLKs 010 = STPCLK# t_{hi} = 0.5 * 16 BCLKs 011 = STPCLK# t_{hi} = 0.25 * 16 BCLKs 100 = STPCLK# t_{hi} = 0.125 * 16 BCLKs 101 = STPCLK# t_{hi} = 0.0625 * 16 BCLKs 110 = STPCLK# t_{hi} = 0.03125 * 32 BCLKs 111 = STPCLK# t_{hi} = 0.015625 * 64 BCLKs			THMIN pin polarity: 0 = High 1 = Low	EPMI trigger for thermal mgmt. 00 = EPMI0# 01 = EPMI1# 10 = EPMI2# 11 = EPMI3# Also see bit 1.		THMIN input: 0 = THMIN 1 = EPMI indicated in bits [3:2]	HDI input: 0 = HDI 1 = EPMI indicated by SYSCFG F0h[1:0]
SYSCFG ABh			**Power Control Latch Register 3**				**Default = 00h**
Enable [3:0] to write latch lines PPWR[11:8]: 0 = Disable 1 = Enable				Read/write data bits for PPWR[11:8]: 0 = Latch output low 1 = Latch output high			
SYSCFG ACh			**Dynamic Clock Control Register**				**Default = 00h**
Reserved		B7 Pin Function Select 0 = DCCEN 1 = MA13	Block other STPCLK# sources when DCCEN active 0 = No 1 = Yes	Current state of DCCEN pin (RO) 0 = Low 1 = high	STPCLK# Deassertion delay from DCCEN state change 00 = 0.5 - 0.7ms 01 = 1.0 - 1.3ms 10 = 1.7 - 2.0ms 11 = 1.00 - 1.25s		Activated/deactivate frequency change 0 = No effect 1 = Toggle DCCEN
SYSCFG ADh			**Feature Control Register 3**				**Default = 00h**
Reserved		CPU power state in Suspend: 0 = Powered 1 = 0 Volt	PCIIDE responds as: 0 = Device 14h, Function 0 1 = Device 01h, Function 1	INIT operation: 0 = Normal 1 = Toggle on Resume	PCIIDE Device ID: 0 = D568h 1 = D721h	Reserved	
SYSCFG AEh			**GNR_ACCESS Feature Register 1**				**Default = 03h**
GNR set select: 0 = GNR1-4 1 = GNR5-8	Reserved	GNR2 cycle decode type: 0 = I/O 1 = Memory	GNR1 cycle decode type: 0 = I/O 1 = Memory	GNR2 base address: A0 (I/O) A14 (Memory)	GNR1 base address: A0 (I/O) A14 (Memory)	GNR2 mask bit: A0 (I/O) A14 (Memory)	GNR1 mask bit: A0 (I/O) A14 (Memory)
SYSCFG AFh-B0h			**Reserved**				**Default = 00h**
SYSCFG B1h			**RSMGRP IRQ Register 2**				**Default = 00h**
EPMI3# Resume: 0 = Disable 1 = Enable	EPMI2# Resume: 0 = Disable 1 = Enable	IRQ15 Resume: 0 = Disable 1 = Enable	IRQ14 Resume: 0 = Disable 1 = Enable	IRQ12 Resume: 0 = Disable 1 = Enable	IRQ11 Resume: 0 = Disable 1 = Enable	IRQ10 Resume: 0 = Disable 1 = Enable	IRQ9 Resume: 0 = Disable 1 = Enable
SYSCFG B2h if AEh[7] = 0			**Clock Source Register 3**				**Default = 00h**
Clock source for HDU_TIMER		Clock source for COM2_TIMER		Clock source for COM1_TIMER		Clock source for GNR2_TIMER	

Table B-4 SYSCFG 30h-FFh (Power Management) (cont.)

7	6	5	4	3	2	1	0
SYSCFG B2h if AEh[7] = 1			**Clock Source Register 3A**				**Default = 00h**
Reserved						Clock source for GNR6_TIMER	
SYSCFG B3h			**Chip Select Cycle Type Register**				**Default = 00h**
GPCS3# ROM width: 0 = 8-bit 1 = 16-bit	GPCS2# ROM width: 0 = 8-bit 1 = 16-bit	GPCS1# ROM width: 0 = 8-bit 1 = 16-bit	GPCS0# ROM width: 0 = 8-bit 1 = 16-bit	GPCS3# cycle type: 0 = I/O 1 = ROMCS	GPCS2# cycle type: 0 = I/O 1 = ROMCS	GPCS1# cycle type: 0 = I/O 1 = ROMCS	GPCS0# cycle type: 0 = I/O 1 = ROMCS
SYSCFG B4h			**HDU_TIMER Register**				**Default = 00h**
Time count byte for HDU_TIMER: Monitors HDU_ACCESS. Time-out generates PMI#19.							
SYSCFG B5h			**COM1_TIMER Register**				**Default = 00h**
Time count byte for COM1_TIMER: Monitors COM1_ACCESS. Time-out generates PMI#17.							
SYSCFG B6h			**COM2_TIMER Register**				**Default = 00h**
Time count byte for COM2_TIMER: Monitors COM2_ACCESS. Time-out generates PMI#18.							
SYSCFG B7h if AEh[7] = 0			**GNR2_TIMER Register**				**Default = 00h**
Time count byte for GNR2_TIMER: Monitors GNR2_ACCESS. Time-out generates PMI#16.							
SYSCFG B7h if AEh[7] = 1			**GNR6_TIMER Register**				**Default = 00h**
Time count byte for GNR6_TIMER: Monitors GNR6_ACCESS. Time-out generates PMI#16.							
SYSCFG B8h if AEh[7] = 0			**GNR2 Base Address Register**				**Default = 00h**
GNR2_ACCESS base address: A[8:1] (I/O) or A[22:15] (Memory)							
SYSCFG B8h if AEh[7] = 1			**GNR6 Base Address Register**				**Default = 00h**
GNR6_Timer base address: A[8:1] (I/O)							
SYSCFG B9h if AEh[7] = 0			**GNR2 Control Register**				**Default = 00h**
GNR2 base address: A9 (I/O) A23 (Memory)	Write decode: 0 = Disable 1 = Enable	Read decode: 0 = Disable 1 = Enable	GNR2 mask bits for address A[5:1] (I/O) or A[19:15] memory: A 1 in a particular bit means that the corresponding bit at B8h[4:0] is not compared. This is used to determine address block size.				
SYSCFG B9h if AEh[7] = 1			**GNR6 Control Register**				**Default = 00h**
GNR6 base address: A9 (I/O)	Write decode: 0 = Disable 1 = Enable	Read decode: 0 = Disable 1 = Enable	GNR6 mask bits for address A[5:1] (I/O)				
SYSCFG BAh			**Chip Select 2 Base Address Register**				**Default = 00h**
GPCS2# base address: A[8:1] (I/O) or A[22:15] (Memory)							

Table B-4 SYSCFG 30h-FFh (Power Management) (cont.)

7	6	5	4	3	2	1	0
SYSCFG BBh			**Chip Select 2 Control Register**				**Default = 00h**
GPCS2# base address: A9 (I/O) A23 (Memory)	Write decode: 0 = Disable 1 = Enable	Read decode: 0 = Disable 1 = Enable	Chip select active: 0 = w/Cmd 1 = before ALE	GPCS2# mask bits for address A[4:1] (I/O) or A[18:15] memory: A 1 in a particular bit means that the corresponding bit at SYSCFG BAh[3:0] is not compared. This is used to determine address block size.			
SYSCFG BCh			**Chip Select 3 Base Address Register**				**Default = 00h**
GPCS3# base address: A[8:1] (I/O) or A[22:15] (Memory)							
SYSCFG BDh			**Chip Select 3 Control Register**				**Default = 00h**
GPCS3# base address: A9 (I/O) A23 (Memory)	Write decode: 0 = Disable 1 = Enable	Read decode: 0 = Disable 1 = Enable	Chip select active: 0 = w/Cmd 1 = before ALE	GPCS3# mask bits for address A[4:1] (I/O) or A[18:15] memory: A 1 in a particular bit means that the corresponding bit at SYSCFG BCh[3:0] is not compared. This is used to determine address block size.			
SYSCFG BEh if AEh[7] = 0			**Idle Reload Event Enable Register 2**				**Default = 00h**
GPCS3#_ ACCESS: 0 = Disable 1 = Enable	GPCS2#_ ACCESS: 0 = Disable 1 = Enable	COM2_ ACCESS: 0 = Disable 1 = Enable	COM1_ ACCESS: 0 = Disable 1 = Enable	GNR2_ ACCESS: 0 = Disable 1 = Enable	HDU_ ACCESS: 0 = Disable 1 = Enable	GNR4_ ACCESS: 0 = Disable 1 = Enable	Override SYSCFG 68h[3:2]: 0 = No 1 = Recover time 1s
SYSCFG BEh if AEh[7] = 1			**Idle Reload Event Enable Register 2A**				**Default = 00h**
Reserved				GNR6_ ACCESS: 0 = Disable 1 = Enable	Reserved	GNR8_ ACCESS: 0 = Disable 1 = Enable	Reserved
SYSCFG BFh			**Chip Select Granularity Register**				**Default = 0Fh**
GPCS3# base address: A0 (I/O) A14 (Memory)	GPCS2# base address: A0 (I/O) A14 (Memory)	GPCS1# base address: A0 (I/O) A14 (Memory)	GPCS0# base address: A0 (I/O) A14 (Mem.)	GPCS3# mask bit: A0 (I/O) A14 (Memory)	GPCS2# mask bit: A0 (I/O) A14 (Memory)	GPCS1# mask bit: A0 (I/O) A14 (Memory)	GPCS0# mask bit: A0 (I/O) A14 (Memory)
SYSCFG C0h-D4h			**Reserved**				**Default = 00h**
SYSCFG D5h			**X Bus Positive Decode Register**				**Default = 00h**
IPC Registers(1): 00 = Reserved 01 = Positive decode 10 = Reserved 11 = Reserved		RTCRD/WR#, RTCAS I/O Ports 70h-71h: 00 = Reserved 01 = Positive decode 10 = Reserved 11 = Reserved		KBDCS# I/O Ports 60, 64, 62, 66, 92h: 00 = Reserved 01 = Positive decode 10 = Reserved 11 = Reserved		ROMCS# memory segments C000h-F000h: 00 = Reserved 01 = Positive decode 10 = Reserved 11 = Reserved	
(1) I/O 20, 21, A0, A1, 40-43, 00-0F, C0-CF, page registers, high page registers, 22, 24, 23 if Index = 01h)							

Table B-4 SYSCFG 30h-FFh (Power Management) (cont.)

7	6	5	4	3	2	1	0
SYSCFG D6h			**PMU Control Register 9**				**Default = 00h**
DSK_ACCESS: 0 = 3F5h only 1 = All FDC Ports (3F2,4,5,7& 372,4,5,7h)	DMA trap PMI#28 SMI: 0 = Disable 1 = Enable	DMAC1 byte pointer flip-flop (RO): 0 = Cleared 1 = Set	APM doze exit PMI#35: 0 = Disable 1 = Enable	SBHE# status trap (RO)	I/O port access trapped (RO): 0 = I/O read 1 = I/O write	Access trap bit A9 (RO)	Access trap bit A8 (RO)
SYSCFG D7h			**Access Port Address Register 1**				**Default = 00h**
Access trap address bits A[7:0]: - These bits, along with SYSCFG D6h[1:0] and SYSCFG EBh[7:0] provide the 16-bit address of the port access that caused the SMI trap. - SYSCFG D6h[2] indicates whether an I/O read or an I/O write access was trapped. - SYSCFG D6h[3] gives the status of the SBHE# signal for the I/O instruction that was trapped.							
SYSCFG D8h if AEh[7] = 0			**PMU Event Register 5**				**Default = 00h**
HDU_TIMER PMI#19 HDU_ACCESS PMI#23: 00 = Disable 01 = Reserved 01 = Reserved 11 = SMI		COM2_TIMER PMI#18 COM2_ACCESS PMI#22: 00 = Disable 01 = Positive decode 10 = Positive decode, SMI 11 = SMI		COM1_TIMER PMI#17 COM1_ACCESS PMI#21: 00 = Disable 01 = Positive decode 10 = Positive decode, SMI 11 = SMI		GNR2_TIMER PMI#16 GNR2_ACCESS PMI#20: 00 = Disable 01 = Positive decode 10 = Positive decode, SMI 11 = SMI	
SYSCFG D8h if AEh[7] = 1			**PMU Event Register 5A**				**Default = 00h**
Reserved						GNR6_TIMER PMI#16 GNR6_ACCESS PMI#20: 00 = Disable 01 = Positive decode 10 = Positive decode, SMI 11 = SMI	
SYSCFG D9h			**PMU Event Register 6**				**Default = 00h**
DOZE_TIMER PMI#27 SMI: 00 = Disable 01 = Enable DOZE_0 10 = Enable DOZE_1 11 = Enable both		RINGI PMI#26 SMI: 00 = Disable 11 = Enable		EPMI3# cool-down clocking PMI#25 SMI: 00 = Disable 11 = Enable		EPMI2# PMI#24 SMI: 00 = Disable 11 = Enable	
SYSCFG DAh			**Power Management Event Status Register (RO)**				**Default = 00h**
Reserved		LOWBAT state: 0 = Low 1 = High	LLOWBAT state: 0 = Low 1 = High	EPMI3# state: 0 = Low 1 = High	EPMI2# state: 0 = Low 1 = High	EPMI1# state: 0 = Low 1 = High	EPMI0# state: 0 = Low 1 = High
SYSCFG DBh if AEh[7] = 0			**Next Access Event Generation Register 1**				**Default = 00h**
I/O blocking control: 0 = Block I/O on Next Access trap 1 = Unblock	SMI on cool-down clocking entry/exit: 0 = Disable 1 = Enable	EPMI3# pin polarity: 0 = Active high 1 = Active low	EPMI2# pin polarity: 0 = Active high 1 = Active low	HDU_ ACCESS PMI#23 on Next Access: 0 = No 1 = Yes	COM2_ ACCESS PMI#22 on Next Access: 0 = No 1 = Yes	COM1_ ACCESS PMI#21 on Next Access: 0 = No 1 = Yes	GNR2_ ACCESS PMI#20 on Next Access: 0 = No 1 = Yes

Table B-4 SYSCFG 30h-FFh (Power Management) (cont.)

7	6	5	4	3	2	1	0
SYSCFG DBh if AEh[7] = 1			**Next Access Event Generation Register 1A**				**Default = 00h**
Reserved							GNR6_ ACCESS PMI#20 on Next Access: 0 = No 1 = Yes
SYSCFG DCh if AEh[7] = 0			**PMU SMI Source Register 1 (Write 1 to Clear)**				**Default = 00h**
PMI#23, HDU_ ACCESS: 0 = Inactive 1 = Active	PMI#22, COM2_ ACCESS: 0 = Inactive 1 = Active	PMI#21, COM1_ ACCESS: 0 = Inactive 1 = Active	PMI#20, GNR2_ ACCESS: 0 = Inactive 1 = Active	PMI#19, HDU_ TIMER: 0 = Inactive 1 = Active	PMI#18, COM2_ TIMER: 0 = Inactive 1 = Active	PMI#17, COM1_ TIMER: 0 = Inactive 1 = Active	PMI#16, GNR2_ TIMER: 0 = Inactive 1 = Active
SYSCFG DCh if AEh[7] = 1			**PMU SMI Source Register 1A (Write 1 to Clear)**				**Default = 00h**
Reserved			PMI#20, GNR6_ ACCESS: 0 = Clear 1 = Active	Reserved			PMI#16, GNR6_ TIMER: 0 = Clear 1 = Active
SYSCFG DDh			**PMU SMI Source Register 2 (Write 1 to Clear)**				**Default = 00h**
PMI#39, PCI retry limit: 0 = Inactive 1 = Active	PMI#38, CISA/PCI IRQ driveback trap: 0 = Inactive 1 = Active	PMI#37, DMA_ ACCESS: 0 = Inactive 1 = Active	PMI#28, DMA Request: 0 = Inactive 1 = Active	PMI#27, DOZE_ TIMER: 0 = Inactive 1 = Active	PMI#26, RINGI: 0 = Inactive 1 = Active	PMI#25, EPMI3# pin/ cool-down clocking: 0 = Inactive 1 = Active	PMI#24, EPMI2# pin: 0 = Inactive 1 = Active
SYSCFG DDh - FS ACPI Version			**PMU SMI Source Register 2 (Write 1 to Clear)**				**Default = 00h**
PMI#39, ACPI SMI: 0 = Inactive 1 = Active	PMI#38, CISA/PCI IRQ driveback trap: 0 = Inactive 1 = Active	PMI#37, DMA_ ACCESS: 0 = Inactive 1 = Active	PMI#28, DMA Request: 0 = Inactive 1 = Active	PMI#27, DOZE_ TIMER: 0 = Inactive 1 = Active	PMI#26, RINGI: 0 = Inactive 1 = Active	PMI#25, EPMI3# pin/ cool-down clocking: 0 = Inactive 1 = Active	PMI#24, EPMI2# pin: 0 = Inactive 1 = Active
SYSCFG DEh if AEh[7] = 0			**Current Access Event Generation Register 1**				**Default = 00h**
HDU_ ACCESS PMI#23 on Current Access: 0 = No 1 = Yes	COM2_ ACCESS PMI#22 on Current Access: 0 = No 1 = Yes	COM1_ ACCESS PMI#21 on Current Access: 0 = No 1 = Yes	GNR2_ ACCESS PMI#20 on Current Access: 0 = No 1 = Yes	GNR1_ ACCESS PMI#15 on Current Access: 0 = No 1 = Yes	KBD_ ACCESS PMI#14 on Current Access: 0 = No 1 = Yes	DSK_ ACCESS PMI#13 on Current Access: 0 = No 1 = Yes	LCD_ ACCESS PMI#12 on Current Access: 0 = No 1 = Yes
SYSCFG DEh if AEh[7] = 1			**Current Access Event Generation Register 1A**				**Default = 00h**
Reserved			GNR6_ ACCESS PMI#20 on Current Access: 0 = No 1 = Yes	Reserved			

Table B-4 SYSCFG 30h-FFh (Power Management) (cont.)

7	6	5	4	3	2	1	0
SYSCFG DFh if AEh[7] = 0			**Activity Tracking Register 1**				**Default = 00h**
HDU_ ACCESS activity: 0 = No 1 = Yes	COM2_ ACCESS activity: 0 = No 1 = Yes	COM1_ ACCESS activity: 0 = No 1 = Yes	GNR2_ ACCESS activity: 0 = No 1 = Yes	GNR1_ ACCESS activity: 0 = No 1 = Yes	KBD_ ACCESS activity: 0 = No 1 = Yes	DSK_ ACCESS activity: 0 = No 1 = Yes	LCD_ ACCESS activity: 0 = No 1 = Yes
SYSCFG DFh if AEh[7] = 1			**Activity Tracking Register 1A**				**Default = 00h**
Reserved			GNR6_ ACCESS activity: 0 = No 1 = Yes	GNR5_ ACCESS activity: 0 = No 1 = Yes	Reserved		
SYSCFG E0h if AEh[7] = 0			**Activity Tracking Register 2**				**Default = 00h**
Reserved						GNR4_ ACCESS activity: 0 = No 1 = Yes	GNR3_ ACCESS activity: 0 = No 1 = Yes
SYSCFG E0h if AEh[7] = 1			**Activity Tracking Register 2A**				**Default = 00h**
Reserved						GNR8_ ACCESS activity: 0 = No 1 = Yes	GNR7_ ACCESS activity: 0 = No 1 = Yes
SYSCFG E1h if AEh[7] = 0			**GNR3 Base Address Register**				**Default = 00h**
GNR3_ACCESS base address: A[8:1] (I/O) or A[22:15] (Memory)							
SYSCFG E1h if AEh[7] = 1			**GNR7 Base Address Register**				**Default = 00h**
GNR7_ACCESS base address: A[8:1] (I/O)							
SYSCFG E2h if AEh[7] = 0			**GNR3 Control Register**				**Default = 00h**
GNR3 base address: A9 (I/O) A23 (Memory)	Write decode: 0 = Disable 1 = Enable	Read decode: 0 = Disable 1 = Enable	GNR3 mask bits for address A[5:1] (I/O) or A[19:15] memory: A 1 in a particular bit means that the corresponding bit at SYSCFG E1h[4:0] is not compared. This is used to determine address block size.				
SYSCFG E2h if AEh[7] = 1			**GNR7 Control Register**				**Default = 00h**
GNR7 base address: A9 (I/O)	Write decode: 0 = Disable 1 = Enable	Read decode: 0 = Disable 1 = Enable	GNR7 mask bits for address A[5:1] (I/O)				
SYSCFG E3h if AEh[7] = 0			**GNR4 Base Address Register**				**Default = 00h**
GNR4_ACCESS base address: A[8:1] (I/O) or A[22:15] (Memory)							
SYSCFG E3h if AEh[7] = 1			**GNR8 Base Address Register**				**Default = 00h**
GNR8_ACCESS base address: A[8:1] (I/O)							

Table B-4 SYSCFG 30h-FFh (Power Management) (cont.)

7	6	5	4	3	2	1	0
SYSCFG E4h if AEh[7] = 0			**GNR4 Control Register**				**Default = 00h**
GNR4 base address: A9 (I/O) A23 (Memory)	Write decode: 0 = Disable 1 = Enable	Read decode: 0 = Disable 1 = Enable	GNR4 mask bits for address A[5:1] (I/O) or A[19:15] memory: A 1 in a particular bit means that the corresponding bit at SYSCFG E3h[4:0] is not compared. This is used to determine address block size.				
SYSCFG E4h if AEh[7] = 1			**GNR8 Control Register**				**Default = 00h**
GNR8 base address: A9 (I/O)	Write decode: 0 = Disable 1 = Enable	Read decode: 0 = Disable 1 = Enable	GNR8 mask bits for address A[5:1] (I/O)				
SYSCFG E5h			**GNR_ACCESS Feature Register 2**				**Default = 03h**
Reserved	Reserved	GNR4 cycle decode type: 0 = I/O 1 = Memory	GNR3 cycle decode Type: 0 = I/O 1 = Memory	GNR4 base address: A0 (I/O) A14 (Memory)	GNR3 base address: A0 (I/O) A14 (Memory)	GNR4 mask bit: A0 (I/O) A14 (Memory)	GNR3 mask bit: A0 (I/O) A14 (Memory)
SYSCFG E6h if AEh[7] = 0			**Clock Source Register 4**				**Default = 70h**
BCLK source for STPCLK# modulation (For normal mode, Doze mode, thermal mgmt): 00 = 4KHz 01 = 32KHz (Default) 10 = 450KHz 11 = 900KHz		GNR4_ ACCESS: 0 = DOZE_0 1 = DOZE_1	GNR3_ ACCESS: 0 = DOZE_0 1 = DOZE_1	Clock source for GNR4_TIMER		Clock source for GNR3_TIMER	
SYSCFG E6h if AEh[7] = 1			**Clock Source Register 4A**				**Default = 70h**
Reserved		GNR8_ ACCESS: 0 = DOZE_0 1 = DOZE_1	GNR7_ ACCESS: 0 = DOZE_0 1 = DOZE_1	Clock source for GNR8_TIMER		Clock source for GNR7_TIMER	
SYSCFG E7h if AEh[7] = 0			**GNR3_TIMER Register**				**Default = 00h**
Time count byte for GNR3_TIMER: Monitors GNR3_ACCESS. Time-out generates PMI#29.							
SYSCFG E7h if AEh[7] = 1			**GNR7_TIMER Register**				**Default = 00h**
Time count byte for GNR7_TIMER: Monitors GNR7_ACCESS. Time-out generates PMI#29.							
SYSCFG E8h if AEh[7] = 0			**GNR4_TIMER Register**				**Default = 00h**
Time count byte for GNR4_TIMER: Monitors GNR4_ACCESS. Time-out generates PMI#30.							
SYSCFG E8h if AEh[7] = 1			**GNR8_TIMER Register**				**Default = 00h**
Time count byte for GNR8_TIMER: Monitors GNR8_ACCESS. Time-out generates PMI#30.							
SYSCFG E9h if AEh[7] = 0			**PMU Event Register 7**				**Default = 00h**
GNR4_TIMER PMI#30 GNR4_ACCESS PMI#32: 00 = Disable 01 = Positive decode 10 = Positive decode, SMI 11 = SMI		GNR3_TIMER PMI#29 GNR3_ACCESS PMI#31: 00 = Disable 01 = Positive decode 10 = Positive decode, SMI 11 = SMI		GNR4_ ACCESS PMI#32 on Current Access: 0 = No 1 = Yes	GNR4_ ACCESS PMI#32 on Next Access: 0 = No 1 = Yes	GNR3_ ACCESS PMI#31 on Current Access: 0 = No 1 = Yes	GNR3_ ACCESS PMI#31 on Next Access: 0 = No 1 = Yes

Table B-4 SYSCFG 30h-FFh (Power Management) (cont.)

7	6	5	4	3	2	1	0
SYSCFG E9h if AEh[7] = 1			**PMU Event Register 7A**				**Default = 00h**
GNR8_TIMER PMI#30 GNR8_ACCESS PMI#32: 00 = Disable 01 = Positive decode 10 = Positive decode, SMI 11 = SMI		GNR7_TIMER PMI#29 GNR7_ACCESS PMI#31: 00 = Disable 01 = Positive decode 10 = Positive decode, SMI 11 = SMI		GNR8_ ACCESS PMI#32 on Current Access: 0 = No 1 = Yes	GNR8_ ACCESS PMI#32 on Next Access: 0 = No 1 = Yes	GNR7_ ACCESS PMI#31 on Current Access: 0 = No 1 = Yes	GNR7_ ACCESS PMI#31 on Next Access: 0 = No 1 = Yes
SYSCFG EAh if AEh[7] = 0			**PMU SMI Source Register 3 (Write 1 to Clear)**				**Default = 00h**
PMI#36, Serial IRQ trap: 0 = Inactive 1 = Active	PMI#35, APM Doze exit: 0 = Inactive 1 = Active	PMI#34, Hot docking time-out SMI: 0 = Inactive 1 = Active	PMI#33, H/W DOZE_ TIMER reload (on Doze exit): 0 = Inactive 1 = Active	PMI#32, GNR4_ ACCESS 0 = Inactive 1 = Active	PMI#31, GNR3_ ACCESS 0 = Inactive 1 = Active	PMI#30, GNR4_ TIMER 0 = Inactive 1 = Active	PMI#29, GNR3_ TIMER 0 = Inactive 1 = Active
SYSCFG EAh if AEh[7] = 1			**PMU SMI Source Register 3A (Write 1 to Clear)**				**Default = 00h**
Reserved				PMI#32, GNR8_ ACCESS 0 = Inactive 1 = Active	PMI#31, GNR7_ ACCESS 0 = Inactive 1 = Active	PMI#30, GNR8_ TIMER 0 = Inactive 1 = Active	PMI#29, GNR7_ TIMER 0 = Inactive 1 = Active
SYSCFG EBh			**Access Port Address Register 2**				**Default = 00h**
Reserved		Access trap address bits A[15:10]: These bits along with SYSCFG D6h[1:0] and D7h[7:0] provide the 16-bit address of the port access that caused the SMI trap. D6h[2] indicates whether an I/O read or an I/O write access was trapped. D6h[3] gives the status of the SBHE# signal for the I/O instruction that was trapped.					
SYSCFG ECh			**Write Trap Register 1 (RO)**				**Default = 00h**
I/O write data trap[15:8]: - Along with SYSCFG EDh[7:0], this register provides the 16-bit write data for trapped I/O write instructions.							
SYSCFG EDh			**Write Trap Register 2 (RO)**				**Default = 00h**
I/O write data trap[7:0]: - Along with SYSCFG ECh[7:0], this register provides the 16-bit write data for trapped I/O write instructions							
SYSCFG EEh			**Power Control Latch Register 4**				**Default = 0Fh**
Enable [3:0] to write latch lines PPWR[15:12]: 0 = Disable 1 = Enable				Read/write data bits for PPWR[15:12] (Default = 1111): 0 = Latch output low 1 = Latch output high			
SYSCFG EFh			**Hot Docking Control Register 1**				**Default = 00h**
Hot docking enable: 0 = Disable 1 = Enable (Default)	HDI input debounce rate: 00 = 100µs 01 = 512µs 10 = 1ms 11 = 2ms		HDI active level: 0 = Active high 1 = Active low Also see SYSCFG AAh[0]	HDI SMI: 0 = No SMI on time-out (Default) 1 = Generate SMI on time-out	HDI time-out period: 000 = 1ms 001 = 8ms 010 = 64ms 011 = 256ms		100 = 512ms 101 = 2s 110 = 8s 111 = 16s

Table B-4 SYSCFG 30h-FFh (Power Management) (cont.)

7	6	5	4	3	2	1	0
SYSCFG F0h			**Hot Docking Control Register 2**				**Default = 00h**
EPMI3# reload IDLE_TIMER: 0 = Disable 1 = Enable	EPMI2# reload IDLE_TIMER: 0 = Disable 1 = Enable	EPMI1# reload IDLE_TIMER: 0 = Disable 1 = Enable	ROM window feature: 0 = Disable 1 = Enable	ROM window size: 00 = 64KB 01 = 128KB 10 = 256KB 11 = 512KB		EPMI trigger for HDI: 00 = EPMI0# 01 = EPMI1# 10 = EPMI2# 11 = EPMI3# Also see SYSCFG AAh[0]	
SYSCFG F1h			**Low Order Start Address for ROM Window**				**Default = 00h**
Start address bits A[23:19] for ROM window					A18 (for 64KB, 128KB, 256KB window sizes) Ignored for 512KB window size	A17 (for 64KB,128KB window sizes) Ignored for 256KB and 512KB window sizes	A16 (for 64KB window size) Ignored for 128KB, 256KB, and 512KB window sizes
SYSCFG F2h			**High Order Start Address for ROM Window**				**Default = 00h**
Start address bits A[31:24] for ROM window							
SYSCFG F3h			**Thermal Management Register 7**				**Default = 00h**
THFREQ[7:0] - Current frequency low byte: - THFREQ[15:0] return a value from 0 to 65535. This value is updated once per second so that software can read the input pin frequency in kHz and correlate the value to the actual CPU temperature at that moment.							
SYSCFG F4h			**Thermal Management Register 8**				**Default = 00h**
THFREQ[15:8] - Current frequency high byte							
SYSCFG F5h			**PMU Event Register 8**				**Default = 00h**
Reserved		Serial IRQ PMI#36: 00 = Disable 11 = Enable		PCI IRQ driveback trap PMI#38 SMI: 00 = Disable 11 = Enable		DMA_ACCESS PMI#37 SMI: 00 = Disable 11 = Enable	
SYSCFG F5h - FS ACPI Version			**PMU Event Register 8**				**Default = 00h**
ACPI SMI PMI#39: 00 = Disable 11 = Enable		Serial IRQ PMI#36: 00 = Disable 11 = Enable		PCI IRQ driveback trap PMI#38 SMI: 00 = Disable 11 = Enable		DMA_ACCESS PMI#37 SMI: 00 = Disable 11 = Enable	
SYSCFG F6h			**DMA Doze Reload Register 1**				**Default = 00h**
DRQ7 reloads DOZE_0: 0 = No 1 = Yes	DRQ6 reloads DOZE_0: 0 = No 1 = Yes	DRQ5 reloads DOZE_0: 0 = No 1 = Yes	IDE DDRQ reloads DOZE_0:(1) 0 = No 1 = Yes	DRQ3 reloads DOZE_0: 0 = No 1 = Yes	DRQ2 reloads DOZE_0: 0 = No 1 = Yes	DRQ1 reloads DOZE_0: 0 = No 1 = Yes	DRQ0 reloads DOZE_0: 0 = No 1 = Yes
(1) Bit 4 controls whether the DDRQ line from bus mastering IDE drives can reload the timers. The bit controls DDRQ from both cables, so enabling the reload feature on any one bus mastering drive enables it for all present.							

Table B-4 SYSCFG 30h-FFh (Power Management) (cont.)

7	6	5	4	3	2	1	0
SYSCFG F7h			**DMA Doze Reload Register 2**				**Default = 00h**
DRQ7 reloads DOZE_1: 0 = No 1 = Yes	DRQ6 reloads DOZE_1: 0 = No 1 = Yes	DRQ5 reloads DOZE_1: 0 = No 1 = Yes	IDE DDRQ reloads DOZE_1:(1) 0 = No 1 = Yes	DRQ3 reloads DOZE_1: 0 = No 1 = Yes	DRQ2 reloads DOZE_1: 0 = No 1 = Yes	DRQ1 reloads DOZE_1: 0 = No 1 = Yes	DRQ0 reloads DOZE_1: 0 = No 1 = Yes
(1) Bit 4 controls whether the DDRQ line from bus mastering IDE drives can reload the timers. The bit controls DDRQ from both cables, so enabling the reload feature on any one bus mastering drive enables it for all present.							
SYSCFG F8h			**Compact ISA Control Register 1**				**Default = 00h**
Inhibit MRD# and MWR# if SEL# asserted on memory cycle: 0 = No 1 = Yes	Inhibit MRD# and MWR# if SEL# asserted on DMA cycle: 0 = No 1 = Yes	Inhibit IOR# and IOW# if SEL# asserted on I/O cycle: 0 = No 1 = Yes	IRQ15 assignment: 0 = IRQ15 1 = RI	Reserved	Fast CISA memory cycle: 0 = Disable (ISA# = 0) 1 = Enable (ISA# = 1)	Reserved	Compact ISA interface: 0 = Disable 1 = Enable If disabled, can use pins as PIO pins.
SYSCFG F9h			**Compact ISA Control Register 2**				**Default = 00h**
SPKD signal driving: 0 = Always, per AT spec 1 = Sync, per CISA spec	End-of-Interrupt Hold - Delays 8259 recognition of EOI command to prevent false interrupts): 00 = None 01 = 1 ATCLK 10 = 2 ATCLKs 11 = 3 ATCLKs		Stop Clock Count bits - Stop clock cycle indication to CISA devices of how many ATCLKs to expect before the clock will stop: 000 = Reserved 001 = 1 ATCLK (Default) ... 111 = 7 ATCLKs			Generate CISA stop clock cycle (if not already stopped): 00 = Never 01 = On STPCLK# cycles to the CPU (hardware) 10 = Immediately (software) 11 = Reserved	
SYSCFG FAh			**Compact ISA Control Register 3**				**Default = 00h**
CDIR response to IDE cable 1 read 0 = Disable 1 = Enable	CDIR response to IDE cable 0 read 0 = Disable 1 = Enable	Reserved		Resume from Suspend on SEL#/ATB# low: 0 = Disable 1 = Enable	Reserved		Configuration cycle generation: 0 = No action 1 = Run cycle using scratchpad
SYSCFG FBh			**DMA Idle Reload Register**				**Default = 00h**
DRQ7 reloads IDLE_TIMER: 0 = No 1 = Yes	DRQ6 reloads IDLE_TIMER: 0 = No 1 = Yes	DRQ5 reloads IDLE_TIMER: 0 = No 1 = Yes	IDE DDRQ reloads IDLE_TIMER:(1) 0 = No 1 = Yes	DRQ3 reloads IDLE_TIMER: 0 = No 1 = Yes	DRQ2 reloads IDLE_TIMER: 0 = No 1 = Yes	DRQ1 reloads IDLE_TIMER: 0 = No 1 = Yes	DRQ0 reloads IDLE_TIMER: 0 = No 1 = Yes
(1) Bit 4 controls whether the DDRQ line from bus mastering IDE drives can reload the timers. The bit controls DDRQ from both cables, so enabling the reload feature on any one bus mastering drive enables it for all present.							

Table B-4 SYSCFG 30h-FFh (Power Management) (cont.)

7	6	5	4	3	2	1	0
SYSCFG FCh			**IDE Power Management Assignment Register 1**				**Default = 33h**
IDE Drive 1 I/O access reloads GNR4_TIMER: 0 = No 1 = Yes	IDE Drive 1 I/O access reloads GNR3_TIMER: 0 = No 1 = Yes	IDE Drive 1 I/O access reloads HDU_TIMER: 0 = No 1 = Yes	IDE Drive 1 I/O access reloads DSK_TIMER: 0 = No 1 = Yes	IDE Drive 0 I/O access reloads GNR4_TIMER: 0 = No 1 = Yes	IDE Drive 0 I/O access reloads GNR3_TIMER: 0 = No 1 = Yes	IDE Drive 0 I/O access reloads HDU_TIMER: 0 = No 1 = Yes	IDE Drive 0 I/O access reloads DSK_TIMER: 0 = No 1 = Yes
Note: If a bus mastering drive is used, DDRQ will also reload the enabled timer(s).							
SYSCFG FDh			**IDE Power Management Assignment Register 2**				**Default = 33h**
IDE Drive 3 I/O access reloads GNR4_TIMER: 0 = No 1 = Yes	IDE Drive 3 I/O access reloads GNR3_TIMER: 0 = No 1 = Yes	IDE Drive 3 I/O access reloads HDU_TIMER: 0 = No 1 = Yes	IDE Drive 3 I/O access reloads DSK_TIMER: 0 = No 1 = Yes	IDE Drive 2 I/O access reloads GNR4_TIMER: 0 = No 1 = Yes	IDE Drive 2 I/O access reloads GNR3_TIMER: 0 = No 1 = Yes	IDE Drive 2 I/O access reloads HDU_TIMER: 0 = No 1 = Yes	IDE Drive 2 I/O access reloads DSK_TIMER: 0 = No 1 = Yes
Note: If a bus mastering drive is used, DDRQ will also reload the enabled timer(s).							
SYSCFG FEh			**GPCS# Global Control Register**				**Default = 00h**
GPCS3# decode: 0 = Enable 1 = Disable	GPCS2# decode: 0 = Enable 1 = Disable	GPCS1# decode: 0 = Enable 1 = Disable	GPCS0# decode: 0 = Enable 1 = Disable	GPCS3# read cycles drive XDIR low: 0 = Disable 1 = Enable	GPCS2# read cycles drive XDIR low: 0 = Disable 1 = Enable	GPCS1# read cycles drive XDIR low: 0 = Disable 1 = Enable	GPCS0# read cycles drive XDIR low: 0 = Disable 1 = Enable
SYSCFG FFh			**Reserved**				**Default = 00h**

B.3 PCIDV1 Register Space

The PCI Configuration Register Space designated as PCIDV1 is accessed through Configuration Mechanism #1 as Bus #0, Device #1, and Function #0.

PCIDV1 00h-3Fh are PCI-specific related registers while PCIDV1 40h-FFh are system control related registers. Table B-5 gives the bit formats for these registers.

Table B-5 PCIDV1 00h-FFh

7	6	5	4	3	2	1	0
PCIDV1 00h			**Vendor Identification Register (RO) - Byte 0**				**Default = 45h**
PCIDV1 01h			**Vendor Identification Register (RO) - Byte 1**				**Default = 10h**
PCIDV1 02h			**Device Identification Register (RO) - Byte 0**				**Default = 00h**
PCIDV1 03h			**Device Identification Register (RO) - Byte 1**				**Default = C7h**
PCIDV1 04h			**Command Register - Byte 0**				**Default = 07h**
Address/data stepping (RO): 0 = Disable (always)	PERR# output pin: 0 = Disable 1 = Enable	Reserved	Memory write and invalidate cycle generation (RO): Must = 0 (always) No memory write and invalidate cycles will be generated by the 82C700.	Special cycles (R/W): The 82C700 does not respond to the PCI special cycle.	Bus master operations (R/W): This allows the 82C700 to perform bus master operations at any time. (Default = 1)	Memory access (RO): Must = 1 (always) The 82C700 allows a PCI bus master access to memory at anytime. (Default = 1)	I/O access (RO): Must = 1 (always) The 82C700 allows a PCI bus master I/O access at any time. (Default = 1)
PCIDV1 05h			**Command Register - Byte 1**				**Default = 00h**
Reserved						Fast back-to-back to different slaves (RO): 0 = Disable 1 = Enable	SERR# output pin: 0 = Disable 1 = Enable
PCIDV1 06h			**Status Register - Byte 0**				**Default = 80h**
Fast back-to-back capability (RO): 0 = Not Capable 1 = Capable (Default = 1) Also see PCIDV1 46h[2].	Reserved						
PCIDV1 07h			**Status Register - Byte 1**				**Default = 02h**
Parity error detected: 0 = No 1 = Yes	SERR# status (RO): Must = 0 (always)	Master abort status (RO): Must = 0 (always)	Received target abort status (RO): 0 = No target abort 1 = Target abort occurred	Signaled target abort status (RO): Must = 0 (always)	DEVSEL# timing status (RO): Must = 01 (always) Indicates medium timing selection; the 82C700 asserts the DEVSEL# based on medium timing. (Default = 01)		Data parity error detected: 0 = No 1 = Yes

Table B-5 PCIDV1 00h-FFh (cont.)

7	6	5	4	3	2	1	0
PCIDV1 08h			**Revision Identification Register (RO)**				**Default = 10h**
- The chip revision number in the PCI configuration space consists of two parts: a major revision number and a minor revision number. The 8-bit register is interpreted as x.yh, where for example revision 2.1 of the chip would be read as two BCD digits, 0010 0001b. Software programmers must take care in using the minor revision number, because the number may change between register- and software-equivalent versions of the chip.							
PCIDV1 09h			**Class Code Register (RO) - Byte 0**				**Default = 00h**
PCIDV1 0Ah			**Class Code Register (RO) - Byte 1**				**Default = 00h**
PCIDV1 0Bh			**Class Code Register (RO) - Byte 2**				**Default = 06h**
PCIDV1 0Ch			**Reserved**				**Default = 00h**
PCIDV1 0Dh			**Master Latency Timer Register (RO)**				**Default = 00h**
PCIDV1 0Eh			**Header Type Register (RO)**				**Default = 00h**
PCIDV1 0Fh			**Built-In Self-Test (BIST) Register (RO)**				**Default = 00h**
PCIDV1 10h-2Bh			**Reserved**				**Default = 00h**
PCIDV1 2Ch-2Dh			**Subsystem Vendor ID** (Write one time only)				**Default = 00h**
PCIDV1 2Eh-2Fh			**Subsystem ID** (Write one time only)				**Default = 00h**
PCIDV1 30h-40h			**Reserved**				**Default = 00h**
PCIDV1 41h			**Keyboard Controller Select Register**				**Default = 00h**
RDKBDPRT (RO): Keyboard controller has received Command D0h and has not received the following 060h read.	WRKBDPRT (RO): Keyboard controller has received Command D1h and has not received the following 060h write.	IMMINIT: Generate INIT immediately on FEh Command. 0 = Generate INIT immediately on FEh Command 1 = Wait for halt before INIT for keyboard reset	KBDEMU: Keyboard emulation 0 = Enable 1 = Disable	KBDCS# includes Port 062h and 066h 0 = Disable 1 = Enable	Reserved		
PCIDV1 42h			**Reserved**				**Default = 00h**

Table B-5 PCIDV1 00h-FFh (cont.)

7	6	5	4	3	2	1	0
PCIDV1 43h			**Feature Control Register**				**Default = 00h**
Buffered DMA (data transfer to/ from DRAM through PCI master): 00 = Original DMA with old protocol 01 = Reserved 10 = Original DMA with PCI master capability 11 = Buffered DMA enable		Enable DMA or ISA master to preempt PCI master: 0 = Disable 1 = Enable	Fixed/rotating priority between PCI masters: 0 = Rotating 1 = Fixed	Back-to-back ISA I/O cycle delay: 00 = Delay by 3 ATCLKs 01 = Delay by 12 ATCLKs 10 = No delay 11 = Delay by 12 ATCLKs(1)		PCI master access to ISA: 0 = Enable 1 = Disable	ISA bus control signals for memory accesses greater than 16M: 0 = Enable 1 = Disable
(1) When bits [3:2] take on the combination of 11, all back-to-back cycles are delayed by 12 AT clocks. This is different from the combinations of 00 and 01 because in the latter case, the delay will be inserted only when an I/O access is followed by a second I/O access with no other type of access occurring in between (e.g., a memory access).							
PCIDV1 44h-45h			**Reserved**				**Default = 00h**
PCIDV1 46h			**PCI Control Register B - Byte 0**				**Default = 06h**
DMA/ISA access to PCI slave: 0 = Never 1 = When internal LMEM# is not asserted Master retry always unmasked after 16 PCICLKs.	XDIR control: 0 = XDIR is controlled for accesses to/from ROM, Kybd controller, RTC 1 = XDIR is controlled only during access to/ from ROM	Conversion of PERR# to SERR#: 0 = Disable 1 = Enable	Address parity checking: 0 = Disable 1 = Enable	Generation of SERR# for target abort: 0 = Disable 1 = Enable	Fast back-to-back capability: 0 = Disable 1 = Enable **Note:** The change on this bit will reflect in PCIDV1 06h[7].	Subtractive decoding sample point: 0 = Typical sample point 1 = Slow sample point	Reserved
PCIDV1 47h			**PCI Control Register B - Byte 1**				**Default = 00h**
Write protect ISA bus ROM: 0 = Disable ROMCS# for writes 1 = Enable ROMCS# for writes	Hidden refresh: 0 = Normal refresh 1 = Hidden refresh Hidden refresh is not supported - never set this bit to 1.	ATCLK frequency: 00 = PCICLK ÷4 01 = PCICLK ÷3 10 = PCICLK ÷2 11 = PCICLK		CPU master to PCI slave write: (turnaround between address and data phases) 0 = 1 PCICLK 1 = 0 PCICLK	PCI master to PCI master preemption timer: (preempt after unserviced request pending for X PCICLKs) 000 = No Preemption 001 = 260 PCICLKs 010 = 132 PCICLKs 011 = 68 PCICLKs 100 = 36 PCICLKs 101 = 20 PCICLKs 110 = 12 PCICLKs 111 = 5 PCICLKs		
PCIDV1 48h			**Strap Option Readback Register - Byte 0**				**Default = 00h**
Reserved	IGERR# strap option selects: 0 = 5.0V ISA 1 = 3.3V ISA	NMI strap option selects: 0 = 5.0V DRAM 1 = 3.3V DRAM	INTR strap option selects: 0 = 5.0V PCI 1 = 3.3V PCI	ROMCS#:KBDCS# strap option selects: 00 = CMD#, ATCLK, BALE 01 = PCICLK3, ATCLK, BALE 10 = PCICLK3, PCICLK4, BALE 11 = PCICLK3, PCICLK4, PCICLK5		RTCWR# strap option selects: 0 = GNT2# 1 = PCICLK2	RTCRD# strap option selects: 0 = GNT1# 1 = PCICLK1

Table B-5 PCIDV1 00h-FFh (cont.)

7	6	5	4	3	2	1	0
PCIDV1 49h			**Strap Option Readback Register - Byte 1**				**Default = 00h**
Reserved			Reserved	RTCAS strap selects(1)	BOFF# strap option selects: 0 = PPWRL 1 = PPWR0#	DBEW# strap option selects: 0 = SA[23:18] pins are SA[23:8] signals 1 = SA[23:18] pins are remapped: SA[23:20] = PPWR[3:0] and SA[19:18] = PPWR[9:8]	A20M# strap selects(1)
(1)Bits 3 and 0 work together:00 = NEC mode & No ISA mode 01 = ISA mode without XD bus 10 = ISA mode with XD bus 11 = No ISA mode							
PCIDV1 4Ah			**ROM Chip Select Register 1**				**Default = 00h**
ROMCS# for F8000h-FFFFFh: 0 = Enable 1 = Disable	ROMCS# for F0000h-F7FFFh: 0 = Enable 1 = Disable	ROMCS# for E8000h-EFFFFh: 0 = Disable 1 = Enable	ROMCS# for E0000h-E7FFFh 0 = Disable 1 = Enable	ROMCS# for D8000h-DFFFFh: 0 = Disable 1 = Enable	ROMCS# for D0000h-D7FFFh: 0 = Disable 1 = Enable	ROMCS# for C8000h-CFFFFh: 0 = Disable 1 = Enable	ROMCS# for C0000h-C7FFFh: 0 = Disable 1 = Enable
PCIDV1 4Bh			**ROM Chip Select Register 2**				**Default = 00h**
ROMCS# for FFFF8000h-FFFFFFFFh: 0 = Enable 1 = Disable	ROMCS# for FFFF0000h-FFFF7FFFh: 0 = Enable 1 = Disable	ROMCS# for FFFE8000h-FFFEFFFFh: 0 = Disable 1 = Enable	ROMCS# for FFFE0000h-FFFE7FFFh: 0 = Disable 1 = Enable	ROMCS# for FFFD8000h-FFFDFFFFh: 0 = Disable 1 = Enable	ROMCS# for FFFD0000h-FFFFD7FFFh: 0 = Disable 1 = Enable	ROMCS# for FFFC8000h-FFFCFFFFh: 0 = Disable 1 = Enable	ROMCS# for FFFC0000h-FFFC7FFFh: 0 = Disable 1 = Enable
PCIDV1 4Ch-4Dh			**Reserved**				**Default = 00h**
PCIDV1 4Eh -			**Miscellaneous Control Register 1**				**Default = 00h**
0 = Test 4 Disable 1 = Test 4 Enable Intended for use on tester. Not for applications use.	This bit must be set to 1 to correct improper operation on TC.	Reserved	Reserved	Pipelined byte merge function: 0 = Disable 1 = Enable	EOP: 0 = Output 1 = Input	Byte merge: 0 = Disable 1 = Enable	ISA master data swap: 0 = Enable 1 = Disable

Table B-5 PCIDV1 00h-FFh (cont.)

7	6	5	4	3	2	1	0
PCIDV1 4Fh -			**Miscellaneous Control Register 2**				**Default = 20h**
Allow IRQA, B,...H PCI IRQs (when programed as level IRQs) to be shareable with PIO PCI IRQ pins: 0 = Disable 1 = Enable	IDE interface: 0 = Disable 1 = Enable	Primary IDE interface (1F0h): 0 = Disable 1 = Enable (Default)	AT clock wait state control: 0 = Extra WS for ISA cycles 1 = No extra WS	Context Save mode: 0 = Disable 1 = Enable	Timer positive decode in PC98 mode (I/O 77h, 75h, 73h, 71h): 0 = Disable, decode 1 CLK after subtractive decode 1 = Enable, medium decode and remap to 43h, 42h, 41h, and 40h	ROMCS#, KBDCS#, and DBEW# pin selections:(1)	BIOS access after soft reset: 0 = ROM 1 = DRAM
(1)0 =ROMCS# pin can be ROMCS# or PIO23 if PCIDV1 52h[2] = 0 ROMCS# pin can be ROMCS# and KBDCS# if PCIDV1 52h[2] = 1 KBDCS# pin can be KBDCS# or PIO24 DBEW# pin is DBEW# 1 =ROMCS# pin is ROMCS# and KBDCS# if PCIDV1 52h[2] = 0 or 1 KBDCS# pin is DRD# DBEW# is DWR# **Note:** Also see PCIDV1 52h[2].							
PCIDV1 50h-51h			**Reserved**				**Default = 00h**
PCIDV1 52h -			**Miscellaneous Controller Register 3**				**Default = 00h**
TC/IDEDIR enable: 0 = Only TC will be generated on this pin 1 =Both TC and IDEDIR will be generayed on thsi pin. This bit should be set to 1, if UltraDMA functionality is required.	STOP# generation for BDMA transfers past a cache line. 0 =no STOP# generation 1 = STOP# generation enabled	Reserved	Abort DDMA remap cycle if claimed by Firestar: 0 = Disable 1 = Enable	Rsvd pin (A7) function: 0 = Rsvd 1 = SDCKE	ROMCS# pin selection: 0 = Controlled by PCIDV1 4Fh[1] 1 = ROMCS# pin is always ROMCS# and KBDCS# **Note:** Also see PCIDV1 4Fh[1]	Priority scheme: 0 = Disable 1 = Enable A setting of 1 will employ a priority scheme that guarantees higher priority for PCI masters during arbitration over DMA and ISA masters for the first 7µs interval after every refresh cycle.	Concurrent refresh and IDE cycle: 0 = Disable 1 = Enable ISA devices that rely on accurate refresh addresses for proper operation should disable this bit.

Table B-5 PCIDV1 00h-FFh (cont.)

7	6	5	4	3	2	1	0
PCIDV1 53h			**Miscellaneous Controller Register 4**				**Default = 00h**
Reserved]	MA12 function on either RAS3# or RAS4# pin: 00 = Disable 01 = MA12 on RAS3# pin 10 = MA12 on RAS4# pin 11 = Reserved		SDCKE on IRQSER: 0 = Disable 1 = Enable	SDCKE on SEL/ATB#: 0 = Disable 1 = Enable	MicroChannel support: 0 = Disable, and allows GNT0# pre-emption 1 = Enable (disables Port 000h accesses, tristates AEN), and masks GNT0# pre-emption	Lock flash ROM: 0 = Disable (generates ROMCS# during ROM writing) 1 = Enable (no ROMCS# on ROM writes)	Reserved

PCIDV1 54h — **IRQ Driveback Address Register - Byte 0: Address Bits [7:0]** — **Default = 00h**

IRQ driveback protocol address bits [7:0]:

- When an external device logic, such as the 82C824 PC Card Controller or the 82C814 Docking Controller, must generate an interrupt from any source, it follows the IRQ Driveback Protocol and toggles the REQ# line to the 82C700. Once it has the bus, it writes the changed IRQ information to the 32-bit I/O address specified in this register. The 82C700 interrupt controller claims this cycle and latches the new IRQ values.
- This register defaults to a value of 00h, which disables the IRQ driveback scheme.

PCIDV1 55h — **IRQ Driveback Address Register - Byte 1: Address Bits [15:8]** — **Default = 00h**

PCIDV1 56h — **IRQ Driveback Address Register - Byte 2: Address Bits [23:16]** — **Default = 00h**

PCIDV1 57h — **IRQ Driveback Address Register - Byte 3: Address Bits [31:24]** — **Default = 00h**

PCIDV1 58h — **DRQ Remap Base Address Register - Byte 0: Address Bits [7:0]** — **Default = 00h**

DRQ remap base address bits [7:0]:

- The distributed DMA protocol requires DMA controller registers for each DMA channel to be individually mapped into I/O space outside the range claimed by ISA devices. Bits A[31:0] of this register specify that base; bits 6:0 are reserved (write 0) because the base address can fall only on 128 byte boundaries. The 82C700 logic uses this base address two ways:

1) to claim accesses to a PCMCIA DMA controller channel;
2) to forward accesses across the bridge to remote devices specified in the DMA Channel Selector Register.

PCIDV1 59h — **DRQ Remap Base Address Register - Byte 1: Address Bits [15:8]** — **Default = 00h**

PCIDV1 5Ah — **DRQ Remap Base Address Register - Byte 2: Address Bits [23:16]** — **Default = 00h**

PCIDV1 5Bh — **DRQ Remap Base Address Register - Byte 3: Address Bits [31:24]** — **Default = 00h**

PCIDV1 5Ch			**DMA Channel Selector Register**				**Default = 00h**
Ch 7 (DMAC2): 0 = Local 1 = On PCI	Ch 6 (DMAC2): 0 = Local 1 = On PCI	Ch 5 (DMAC2): 0 = Local 1 = On PCI	Hardware Distributed DMA: 0 = Disable 1 = Enable	Ch 3 (DMAC1): 0 = Local 1 = On PCI	Ch 2 (DMAC1): 0 = Local 1 = On PCI	Ch 1 (DMAC1): 0 = Local 1 = On PCI	Ch 0 (DMAC1): 0 = Local 1 = On PCI

PCIDV1 5Dh — **Reserved** — **Default = 00h**

Table B-5 PCIDV1 00h-FFh (cont.)

7	6	5	4	3	2	1	0
PCIDV1 5Eh			**IRQ Scheme Management Register**				**Default = 00h**
End-of-Interrupt Holdoff bits [1:0]: The value of these bits selects the number of retries that will be forced on the PCI bus every time an attempt is made to write I/O Port 020h or 0A0h, where OCW2 of the interrupt controller is set. Multiple retries ensure that a device trying to generate an IRQ driveback will succeed before an EOI command takes effect. This feature eliminates the possibility that an EOI could be registered before a change in IRQ status gets back to the central interrupt controller.		IRQ driveback data readback selection at PCIDV1 60h-63h: 0 = 1st data phase 1 = 2nd data phase	Reserved				
PCIDV1 5Fh			**SYSCFG Base Select Register**				**Default = 00h**
Configuration Register Index/Data Port Address bits A[15:8]: - This byte provides the upper address bits of the 16-bit address for the system configuration registers index/data port. Bits A[7:0] always point to 22h/24h. At reset, this register defaults to 0, so the full I/O address for the index/data ports is 0022h/0024h.							
PCIDV1 60h			**IRQ Driveback Data Register - Byte 0: Data Bits [7:0]**				**Default = 00h**
IRQ Driveback Data Bits [7:0]: - Whenever the 82C700 receives an IRQ driveback cycle, it latches the entire 32-bit data value in this register. If any of the IRQs set active in this driveback are also programmed to generate an SMI (through the standard PMU register settings), SMM code can read this register to determine the exact driveback value written.							
PCIDV1 61h			**IRQ Driveback Data Register - Byte 1: Data Bits [15:8]**				**Default = 00h**
PCIDV1 62h			**IRQ Driveback Data Register - Byte 2: Data Bits [23:16]**				**Default = 00h**
PCIDV1 63h			**IRQ Driveback Data Register - Byte 3: Data Bits [31:24]**				**Default = 00h**
PCIDV1 64h			**PCI Master Control Register 2]**				**Default = 10h**
PCI master write X-1-1-1: 0 = Disable 1 = Enable	PCI master read X-1-1-1: 0 = Disable 1 = Enable	PCI master/IDE concurrence: 0 = Disable 1 = Enable Also see PCIIDE 42h[3]	New AHOLD protocol: 0 = Disable 1 = Enable (Default = 1) (Use HREQ to latch AHOLD)	Non-contiguous byte enables for PCI masters: 0 = Disable 1 = Enable	Reserved	Synchronize reset for refresh logic (for improved timing): 0 = Enable 1 = Disable	ISA refresh: 0 = Enable 1 = Disable, to increase PCI master bandwidth

Table B-5 PCIDV1 00h-FFh (cont.)

7	6	5	4	3	2	1	0
PCIDV1 65h -			**PCI Master Control Register 2**				**Default = 01h**
Reserved	Retry all PCI IDE cycles if buffered DMA occupies the ISA bus: 0 = Enable 1 = Disable	CPU priority control - When accessing PCI: 00 = CPU is lowest priority 01 = Highest priority after 4 PCI master grants 10 = Highest priority after 2 PCI master grants 11 = Highest priority after 3 PCI master grants		Interrupt request register recover:(1) 0 = Disable 1 = Enable	Select DMA current or base address and counter to be read: 0 = Current 1 = Base	ISA retry for CPU/PCI master access ISA cycle: 0 = Disable 1 = Enable	Use of AHOLD signal during CPU-to-PCI cycles:(2) 0 = Disable 1 = Enable (Default = 1)
(1) This features allows IRR to be accessed at SYSCFG 99h for PIC1 and 9Ah for PIC2. (2) Bit 0 is used only if PCIDV1 64h[4] = 1.							
PCIDV1 66h			**Reserved**				**Default = 00h**
PCIDV1 67h			**Miscellaneous Control Register 5**				**Default = 00h**
PCI arbitration time-out mode: 0 = Disable 1 = Enable See PCIDV1 65h[5:4])	Zero wait state CPU R/W for I/O accesses: 0 = Disable 1 = Enable	BDMA and ISA Master fix 0 = Disable 1 = Enable This bit should be set to 1 when BDMA is enabled	CPU request for PCI control: 0 = Normal 1 = Reserved	IOCHRDY length of assertion - 120ns 0 = Disable 1 = Enable	Refresh preemption: 0 = Enable 1 = Disable	AHOLD delay: 0 = No delay 1 = Delay AHOLD by 3 PCI CLKs	AD31 in Type 1 configuration cycle: 0: AD31 = 0 1: AD31 = 1
PCIDV1 68h			**PCICLK Control Register 1**				**Default = FFh**
Source of PMI# 34 0 = HDI 1 =SERR#	SERR# generates: 0 =NMI 1 =SMI. This is valid only if bit 7 is set to 1	PCICLK5: 0 = Disable 1 = Enable	PCICLK4: 0 = Disable 1 = Enable	PCICLK3: 0 = Disable 1 = Enable	PCICLK2: 0 = Disable 1 = Enable	PCICLK1: 0 = Disable 1 = Enable	PCICLK0: 0 = Disable 1 = Enable
PCIDV1 69h			**PCICLK Control Register 2**				**Default = 00h**
Reserved		PCICLK5 affected by CLKRUN#: 0 = No 1 = Yes	PCICLK4 affected by CLKRUN#: 0 = No 1 = Yes	PCICLK3 affected by CLKRUN#: 0 = No 1 = Yes	PCICLK2 affected by CLKRUN#: 0 = No 1 = Yes	PCICLK1 affected by CLKRUN#: 0 = No 1 = Yes	PCICLK0 affected by CLKRUN#: 0 = No 1 = Yes

Table B-5 PCIDV1 00h-FFh (cont.)

7	6	5	4	3	2	1	0
PCIDV1 6Ah			**PCICLK Skew Adjust Register for PCICLK 0, 1, 2**				**Default = 00h**
Reserved: For PCICLK debug purposes.	Coarse adjustment: 000 = No delay 001 = (PCICLK period ÷2) + ~4ns 010 = (PCICLK period ÷2) + ~8ns 011 = (PCICLK period ÷2) + ~12ns 100 = (PCICLK period ÷2) + ~16ns 101 = (PCICLK period ÷2) + ~20ns 110 = (PCICLK period ÷2) + ~24ns 111 = (PCICLK period ÷2) + ~28ns			Reserved	Fine adjustment: 000 = No delay 001 = Add ~1ns 010 = Add ~2ns 011 = Add ~3ns 100 = Add ~4ns 101 = Add ~5ns 110 = Add ~6ns 111 = Add ~7ns		
If both coarse adjustment and fine adjustment are set to 0 (no delay), PCICLKIN will be routed to PCICLK output with no compensation.							
PCIDV1 6Bh			**PCICLK Skew Adjust Register for PCICLK 3, 4, 5**				**Default = 00h**
Reserved: For PCICLK debug purposes.	Coarse adjustment: 000 = No delay 001 = (PCICLK period ÷2) + ~4ns 010 = (PCICLK period ÷2) + ~8ns 011 = (PCICLK period ÷2) + ~12ns 100 = (PCICLK period ÷2) + ~16ns 101 = (PCICLK period ÷2) + ~20ns 110 = (PCICLK period ÷2) + ~24ns 111 = (PCICLK period ÷2) + ~28ns			Reserved	Fine adjustment: 000 = No delay 001 = Add ~1ns 010 = Add ~2ns 011 = Add ~3ns 100 = Add ~4ns 101 = Add ~5ns 110 = Add ~6ns 111 = Add ~7ns		
If both coarse adjustment and fine adjustment are set to 0 (no delay), PCICLKIN will be routed to PCICLK output with no compensation.							
PCIDV1 6Ch-6Fh			**Reserved**				**Default = 00h**
PCIDV1 70h			**Leakage Control Register - Byte 0**				**Default = 00h**
W/R#, HITM#, FERR#, SMIACT# Suspend state: 00 = No pull-downs 01 = Pull-down 10 = Reserved 11 = Reserved		BE[7:0]#, M/IO#, D/C#, CACHE#, LOCK# Suspend state: 00 = No pull-downs 01 = Pull-down during BOFF# 10 = Pull-down during Suspend 11 = Pull-down during BOFF# and Suspend		HD[63:0] Suspend and Idle state: 00 = Tristate 01 = Tristate, pull-down 10 = Reserved 11 = Reserved		HA[31:3] Suspend state: 00 = Tristate 01 = Tristate, pull-down 10 = Reserved 11 = Reserved	
PCIDV1 71h			**Leakage Control Register - Byte 1**				**Default = 00h**
IGERR#, A20M# Suspend state: 00 = Drive active 01 = Drive inactive 10 = Tristate, pull-down 11 = Reserved		CPURST, CPUINIT, AHOLD, NMI, INTR, STPCLK# Suspend state: 00 = Drive 01 = Tristate 10 = Reserved 11 = Reserved		BRDY#, NA#, KEN#, EADS#, BOFF#, SMI# Suspend state: 0 = Drive 1 = Tristate	MD[63:0] Suspend state: XX1 = Pull-down at Idle X1X = Pull-down in STPCLK# 1XX = Pull-down in Suspend		

Table B-5 PCIDV1 00h-FFh (cont.)

7	6	5	4	3	2	1	0
PCIDV1 72h			**Leakage Control Register - Byte 2**				**Default = 00h**
REQ3#, GNT3# Suspend state: 00 = Drive 01 = Tristate 10 = Reserved 11 = Reserved		C/BE[3:0]#, IRDY#, TRDY#, STOP#, AD[31:0], LOCK#, FRAME#, PAR, PERR#, SERR#, DEVSEL#, GNT1#, REQ0#, GNT0#, REQ2#, GNT2# Suspend state: 00 = Drive 01 = Tristate 10 = Tristate, pull-down 11 = Reserved		TAG[7:0] state: X1 = Tristate pull-down in STPCLK# 1X = Tristate pull-down in Suspend		BWE#, GWE# Suspend state: 0 = Drive 1 = Tristate	CACS# Suspend state: 0 = Drive 1 = Tristate, pull-down
PCIDV1 73h			**Leakage Control Register - Byte 3**				**Default = 00h**
CMD# Suspend state: 00 = Drive 01 = Tristate 10 = Tristate, pull-down 11 = Reserved		SD[15:0] Suspend state: 01 =No pull-up/down in Active mode, tristate in Suspend mode 01 =Pull-up in Active mode, tristate in Suspend mode 10 =No pull-up/down in Active mode, pull-down in Suspend mode 11 =Pull-up in Active mode, pull-down in Suspend mode		DBEW# Suspend state: 00 = Drive 01 = Tristate 10 = Tristate, pull-down 11 = Reserved		IRQSER Suspend state: 00 = Drive 01 = Tristate 10 = Tristate, pull-down 11 = Reserved	
PCIDV1 74h			**Leakage Control Register - Byte 4**				**Default = 00h**
SA[15:0] Suspend state: 00 = Drive 01 = Tristate 10 = Tristate, pull-down 11 = Reserved		SA[23:18] Suspend state: 00 = Drive 01 = Tristate 10 = Tristate, pull-down 11 = Reserved		XD[7:0] Suspend state: 01 =No pull-up/down in Active mode, tristate in Suspend mode 01 =Pull-up in Active mode, tristate in Suspend mode 10 =No pull-up/down in Active mode, pull-down in Suspend mode 11 =Pull-up in Active mode, pull-down in Suspend mode		RFSH#, MRD#, MWR#, IORD#, IOWR# Suspend state: 00 = Drive 01 = Tristate 10 = Tristate, pull-down 11 = Reserved	
PCIDV1 75h-			**Leakage Control Register - Byte 5**				**Default = 00h**
Secondary IDE interface in ISA-less mode: 0 = Tristated 1 = Driven	XD bus (primary IDE interface) in no XD bus mode: 0 = Tristated 1 = Driven This bit must be set if the RTCAS:A20M# strap option = 10 to allow IDE control signals to be driven on the XD bus.	MD[63:0] engage pull-down: 0 = Controlled by PCIDV1 71[2:0]h 1 = Pull-down always (overrides PCIDV1 71h[2:0])	TAG[7:0] engage pull-down: 0 = Controlled by PCIDV1 72h[3:2] 1 = Pull-down always (overrides PCIDV1 72h[3:2])	DACK[7:0]# Suspend state: 00 = Drive 01 = Tristate 10 = Drive low 11 = Reserved		RTCAS, RTCRD#, RTCWR# Suspend state: 00 = Drive 01 = Tristate 10 = RTCAS: Tristate, pull-up, RTCRD# and RTCWR#: Tristate, pull-down 11 = Reserved	

Table B-5 PCIDV1 00h-FFh (cont.)

7	6	5	4	3	2	1	0
PCIDV1 76h			**Hot Docking Leakage Control Register**				**Default = 00h**
Reserved						Hot-docking tristate PCI bus/control: 0 = Disable 1 = Enable	Hot-docking tristate ISA bus/control: 0 = Disable 1 = Enable
PCIDV1 77h-7Fh			**Reserved**				**Default = 00h**
PCIDV1 80h			**PIO0 Pin (CDOE#) Function Register**				**Default = 00h**
Tristate, pull-down PIO0 during Suspend: 0 = No 1 = Yes	000 = Group 0 (Power Management Inputs) 001 = Group 1 (Power Control Outputs) 010 = Group 2 (Miscellaneous Inputs) 011 = Group 3 (Miscellaneous Outputs) 100 = Group 4 (IDE Controller Outputs) 101 = Group 5 (Gate Logic Inputs) 110 = Group 6 (Logic Outputs) 111 = Group 7 (Reserved)			0000 = Group sub-function 01000 = Group sub-function 8 0001 = Group sub-function 11001 = Group sub-function 9 0010 = Group sub-function 21010 = Group sub-function 10 0011 = Group sub-function 31011 = Group sub-function 11 0100 = Group sub-function 41100 = Group sub-function 12 0101 = Group sub-function 51101 = Group sub-function 13 0110 = Group sub-function 61110 = Group sub-function 14 0111 = Group sub-function 71111 = Group sub-function 15			
Note: Refer to Section 3.3, Programmable I/O Pins for further information.							
PCIDV1 81h			**PIO1 Pin (TAGWE#) Function Register**				**Default = 00h**
Tristate, pull-down PIO1 during Suspend: 0 = No 1 = Yes	Group X selection: Refer to PCIDV1 80h[6:4] for decode.			Group sub-function X selection: Refer to PCIDV1 80h[3:0] for decode.			
PCIDV1 82h			**PIO2 Pin (ADSC#) Function Register**				**Default = 00h**
Tristate, pull-down PIO2 during Suspend: 0 = No 1 = Yes	Group X selection: Refer to PCIDV1 80h[6:4] for decode.			Group sub-function X selection: Refer to PCIDV1 80h[3:0] for decode.			
PCIDV1 83h			**PIO3 Pin (ADV#) Function Register**				**Default = 00h**
Tristate, pull-down PIO3 during Suspend: 0 = No 1 = Yes	Group X selection: Refer to PCIDV1 80h[6:4] for decode.			Group sub-function X selection: Refer to PCIDV1 80h[3:0] for decode.			
PCIDV1 84h			**PIO4 Pin (RAS2#) Function Register**				**Default = 00h**
Tristate, pull-down PIO4 during Suspend: 0 = No 1 = Yes	Group X selection: Refer to PCIDV1 80h[6:4] for decode.			Group sub-function X selection: Refer to PCIDV1 80h[3:0] for decode.			

Table B-5 PCIDV1 00h-FFh (cont.)

7	6	5	4	3	2	1	0
PCIDV1 85h			**PIO5 Pin (RAS1#) Function Register**				**Default = 00h**
Tristate, pull-down PIO5 during Suspend: 0 = No 1 = Yes	Group X selection: Refer to PCIDV1 80h[6:4] for decode.			Group sub-function X selection: Refer to PCIDV1 80h[3:0] for decode.			
PCIDV1 86h			**PIO6 Pin (CLKRUN#) Function Register**				**Default = 00h**
Tristate, pull-down PIO6 during Suspend: 0 = No 1 = Yes	Group X selection: Refer to PCIDV1 80h[6:4] for decode.			Group sub-function X selection: Refer to PCIDV1 80h[3:0] for decode.			
PCIDV1 87h			**PIO7 Pin (REQ1#) Function Register**				**Default = 00h**
Tristate, pull-down PIO7 during Suspend: 0 = No 1 = Yes	Group X selection: Refer to PCIDV1 80h[6:4] for decode.			Group sub-function X selection: Refer to PCIDV1 80h[3:0] for decode.			
PCIDV1 88h			**PIO8 Pin (REQ2#) Function Register**				**Default = 00h**
Tristate, pull-down PIO8 during Suspend: 0 = No 1 = Yes	Group X selection: Refer to PCIDV1 80h[6:4] for decode.			Group sub-function X selection: Refer to PCIDV1 80h[3:0] for decode.			
PCIDV1 89h			**PIO9 Pin (DDRQ0) Function Register**				**Default = 00h**
Tristate, pull-down PIO9 during Suspend: 0 = No 1 = Yes	Group X selection: Refer to PCIDV1 80h[6:4] for decode.			Group sub-function X selection: Refer to PCIDV1 80h[3:0] for decode.			
PCIDV1 8Ah			**PIO10 Pin (IRQ1) Function Register**				**Default = 00h**
Tristate, pull-down PIO10 during Suspend: 0 = No 1 = Yes	Group X selection: Refer to PCIDV1 80h[6:4] for decode.			Group sub-function X selection: Refer to PCIDV1 80h[3:0] for decode.			
PCIDV1 8Bh			**PIO11 Pin (IRQ8#) Function Register**				**Default = 00h**
Tristate, pull-down PIO11 during Suspend: 0 = No 1 = Yes	Group X selection: Refer to PCIDV1 80h[6:4] for decode.			Group sub-function X selection: Refer to PCIDV1 80h[3:0] for decode.			

Table B-5 PCIDV1 00h-FFh (cont.)

7	6	5	4	3	2	1	0
PCIDV1 8Ch			**PIO12 Pin (IRQ12) Function Register**				**Default = 00h**
Tristate, pull-down PIO12 during Suspend: 0 = No 1 = Yes	Group X selection: Refer to PCIDV1 80h[6:4] for decode.			Group sub-function X selection: Refer to PCIDV1 80h[3:0] for decode.			
PCIDV1 8Dh			**PIO13 Pin (IRQ14) Function Register**				**Default = 00h**
Tristate, pull-down PIO13 during Suspend: 0 = No 1 = Yes	Group X selection: Refer to PCIDV1 80h[6:4] for decode.			Group sub-function X selection: Refer to PCIDV1 80h[3:0] for decode.			
PCIDV1 8Eh			**PIO14 Pin (SEL#/ATB#) Function Register**				**Default = 00h**
Tristate, pull-down PIO14 during Suspend: 0 = No 1 = Yes	Group X selection: Refer to PCIDV1 80h[6:4] for decode.			Group sub-function X selection: Refer to PCIDV1 80h[3:0] for decode.			
PCIDV1 8Fh			**PIO15 Pin (RSTDRV) Function Register**				**Default = 00h**
Tristate, pull-down PIO15 during Suspend: 0 = No 1 = Yes	Group X selection: Refer to PCIDV1 80h[6:4] for decode.			Group sub-function X selection: Refer to PCIDV1 80h[3:0] for decode.			
PCIDV1 90h			**PIO16 Pin (SA16) Function Register**				**Default = 00h**
Tristate, pull-down PIO16 during Suspend: 0 = No 1 = Yes	Group X selection: Refer to PCIDV1 80h[6:4] for decode.			Group sub-function X selection: Refer to PCIDV1 80h[3:0] for decode.			
PCIDV1 91h			**PIO17 Pin (SA17) Function Register**				**Default = 00h**
Tristate, pull-down PIO17 during Suspend: 0 = No 1 = Yes	Group X selection: Refer to PCIDV1 80h[6:4] for decode.			Group sub-function X selection: Refer to PCIDV1 80h[3:0] for decode.			

Table B-5 PCIDV1 00h-FFh (cont.)

7	6	5	4	3	2	1	0
PCIDV1 92h			**PIO18 Pin (IO16#) Function Register**				**Default = 00h**
Tristate, pull-down PIO18 during Suspend: 0 = No 1 = Yes	Group X selection: Refer to PCIDV1 80h[6:4] for decode.			Group sub-function X selection: Refer to PCIDV1 80h[3:0] for decode.			
PCIDV1 93h			**PIO19 Pin (M16#) Function Register**				**Default = 00h**
Tristate, pull-down PIO19 during Suspend: 0 = No 1 = Yes	Group X selection: Refer to PCIDV1 80h[6:4] for decode.			Group sub-function X selection: Refer to PCIDV1 80h[3:0] for decode.			
PCIDV1 94h			**PIO20 Pin (SBHE#) Function Register**				**Default = 00h**
Tristate, pull-down PIO20 during Suspend: 0 = No 1 = Yes	Group X selection: Refer to PCIDV1 80h[6:4] for decode.			Group sub-function X selection: Refer to PCIDV1 80h[3:0] for decode.			
PCIDV1 95h			**PIO21 Pin (SMRD#) Function Register**				**Default = 00h**
Tristate, pull-down PIO21 during Suspend: 0 = No 1 = Yes	Group X selection: Refer to PCIDV1 80h[6:4] for decode.			Group sub-function X selection: Refer to PCIDV1 80h[3:0] for decode.			
PCIDV1 96h			**PIO22 Pin (SMWR#) Function Register**				**Default = 00h**
Tristate, pull-down PIO22 during Suspend: 0 = No 1 = Yes	Group X selection: Refer to PCIDV1 80h[6:4] for decode.			Group sub-function X selection: Refer to PCIDV1 80h[3:0] for decode.			
PCIDV1 97h			**PIO23 Pin (ROMCS#) Function Register**				**Default = 00h**
Tristate, pull-down PIO23 during Suspend: 0 = No 1 = Yes	Group X selection: Refer to PCIDV1 80h[6:4] for decode.			Group sub-function X selection: Refer to PCIDV1 80h[3:0] for decode.			

Table B-5 PCIDV1 00h-FFh (cont.)

7	6	5	4	3	2	1	0
PCIDV1 98h			**PIO24 Pin (KBDCS#) Function Register**				**Default = 00h**
Tristate, pull-down PIO24 during Suspend: 0 = No 1 = Yes	Group X selection: Refer to PCIDV1 80h[6:4] for decode.			Group sub-function X selection: Refer to PCIDV1 80h[3:0] for decode.			
PCIDV1 99h			**PIO25 Pin (DRQA) Function Register**				**Default = 00h**
Tristate, pull-down PIO25 during Suspend: 0 = No 1 = Yes	Group X selection: Refer to PCIDV1 80h[6:4] for decode.			Group sub-function X selection: Refer to PCIDV1 80h[3:0] for decode.			
PCIDV1 9Ah			**PIO26 Pin (DRQB) Function Register**				**Default = 00h**
Tristate, pull-down PIO26 during Suspend: 0 = No 1 = Yes	Group X selection: Refer to PCIDV1 80h[6:4] for decode.			Group sub-function X selection: Refer to PCIDV1 80h[3:0] for decode.			
PCIDV1 9Bh			**PIO27 Pin (DRQC) Function Register**				**Default = 00h**
Tristate, pull-down PIO27 during Suspend: 0 = No 1 = Yes	Group X selection: Refer to PCIDV1 80h[6:4] for decode.			Group sub-function X selection: Refer to PCIDV1 80h[3:0] for decode.			
PCIDV1 9Ch			**PIO28 Pin (DRQD) Function Register**				**Default = 00h**
Tristate, pull-down PIO28 during Suspend: 0 = No 1 = Yes	Group X selection: Refer to PCIDV1 80h[6:4] for decode.			Group sub-function X selection: Refer to PCIDV1 80h[3:0] for decode.			
PCIDV1 9Dh			**PIO29 Pin (DRQE) Function Register**				**Default = 00h**
Tristate, pull-down PIO29 during Suspend: 0 = No 1 = Yes	Group X selection: Refer to PCIDV1 80h[6:4] for decode.			Group sub-function X selection: Refer to PCIDV1 80h[3:0] for decode.			

Table B-5 PCIDV1 00h-FFh (cont.)

7	6	5	4	3	2	1	0
PCIDV1 9Eh			**PIO30 Pin (DRQF) Function Register**				**Default = 00h**
Tristate, pull-down PIO30 during Suspend: 0 = No 1 = Yes	Group X selection: Refer to PCIDV1 80h[6:4] for decode.			Group sub-function X selection: Refer to PCIDV1 80h[3:0] for decode.			
PCIDV1 9Fh			**PIO31 Pin (DRQG) Function Register**				**Default = 00h**
Tristate, pull-down PIO31 during Suspend: 0 = No 1 = Yes	Group X selection: Refer to PCIDV1 80h[6:4] for decode.			Group sub-function X selection: Refer to PCIDV1 80h[3:0] for decode.			
PCIDV1 A0h			**Logic Matrix Register 1**				**Default = 00h**
Invert input 01h (whether from PIO pin or from logic matrix output)? 0 = No 1 = Yes	Connect logic input 01h (AND2) to: 000 = PIO pin 001 = Logic 1 010 = Out 2h (AND output) 011 = Out 3h (NAND output) 100 = Out 4h (OR output) 101 = Out 5h (XOR output) 110 = Out 6h (flip-flop 1 output) 111 = Out 7h (flip-flop 2 output)			Invert input 00h (whether from PIO pin or from logic matrix output)? 0 = No 1 = Yes	Connect logic input 00h (AND1) to: Refer to PCIDV1 A0h[6:4] for decode.		
PCIDV1 A1h			**Logic Matrix Register 2**				**Default = 00h**
Invert input 03h? 0 = No 1 = Yes	Connect logic input 03h (NAND) to: Refer to PCIDV1 A0h[6:4] for decode.			Invert input 02h? 0 = No 1 = Yes	Connect logic input 02h (AND3) to: Refer to PCIDV1 A0h[6:4] for decode.		
PCIDV1 A2h			**Logic Matrix Register 3**				**Default = 00h**
Invert input 05h? 0 = No 1 = Yes	Connect logic input 05h (OR2) to: Refer to PCIDV1 A0h[6:4] for decode.			Invert input 04h? 0 = No 1 = Yes	Connect logic input 04h (OR1) to: Refer to PCIDV1 A0h[6:4] for decode.		
PCIDV1 A3h			**Logic Matrix Register 4**				**Default = 00h**
Invert input 07h? 0 = No 1 = Yes	Connect logic input 07h (XOR1) to: Refer to PCIDV1 A0h[6:4] for decode.			Invert input 06h? 0 = No 1 = Yes	Connect logic input 06h (OR3) to: Refer to PCIDV1 A0h[6:4] for decode.		
PCIDV1 A4h			**Logic Matrix Register 5**				**Default = 00h**
Invert input 09h? 0 = No 1 = Yes	Connect logic input 09h (XOR3) to: Refer to PCIDV1 A0h[6:4] for decode.			Invert input 08h? 0 = No 1 = Yes	Connect logic input 08h (XOR2) to: Refer to PCIDV1 A0h[6:4] for decode.		

Table B-5 PCIDV1 00h-FFh (cont.)

7	6	5	4	3	2	1	0
PCIDV1 A5h			**Logic Matrix Register 6**				**Default = 00h**
Invert input 0Bh? 0 = No 1 = Yes	Connect logic input 0Bh (flip-flop 1, -D input) to: Refer to PCIDV1 A0h[6:4] for decode.			Invert input 0Ah? 0 = No 1 = Yes	Connect logic input 0Ah (flip-flop 1, PRE# input) to: Refer to PCIDV1 A0h[6:4] for decode.		
PCIDV1 A6h			**Logic Matrix Register 7**				**Default = 00h**
Invert input 0Dh? 0 = No 1 = Yes	Connect logic input 0Dh (flip-flop 1, CLR# input) to: Refer to PCIDV1 A0h[6:4] for decode.			Invert input 0Ch? 0 = No 1 = Yes	Connect logic input 0Ch (flip-flop 1, CPUCLKIN input) to: Refer to PCIDV1 A0h[6:4] for decode.		
PCIDV1 A7h			**Logic Matrix Register 8**				**Default = 00h**
Invert input 0Fh? 0 = No 1 = Yes	Connect logic input 0Fh (flip-flop 2, CPUCLKIN input) to: Refer to PCIDV1 A0h[6:4] for decode.			Invert input 0Eh? 0 = No 1 = Yes	Connect logic input 0Eh (flip-flop 1, D input) to: Refer to PCIDV1 A0h[6:4] for decode.		
PCIDV1 A8h			**PIO Pin Current State Register 1**				**Default = 00h**
Value on PIO7 pin: 0 = Logic low 1 = Logic high	Value on PIO6 pin: 0 = Logic low 1 = Logic high	Value on PIO5 pin: 0 = Logic low 1 = Logic high	Value on PIO4 pin: 0 = Logic low 1 = Logic high	Value on PIO3 pin: 0 = Logic low 1 = Logic high	Value on PIO2 pin: 0 = Logic low 1 = Logic high	Value on PIO1 pin: 0 = Logic low 1 = Logic high	Value on PIO0 pin: 0 = Logic low 1 = Logic high
PCIDV1 A9h			**PIO Pin Current State Register 2**				**Default = 00h**
Value on PIO15 pin: 0 = Logic low 1 = Logic high	Value on PIO14 pin: 0 = Logic low 1 = Logic high	Value on PIO13 pin: 0 = Logic low 1 = Logic high	Value on PIO12 pin: 0 = Logic low 1 = Logic high	Value on PIO11 pin: 0 = Logic low 1 = Logic high	Value on PIO10 pin: 0 = Logic low 1 = Logic high	Value on PIO9 pin: 0 = Logic low 1 = Logic high	Value on PIO8 pin: 0 = Logic low 1 = Logic high
PCIDV1 AAh			**PIO Pin Current State Register 3**				**Default = 00h**
Value on PIO23 pin: 0 = Logic low 1 = Logic high	Value on PIO22 pin: 0 = Logic low 1 = Logic high	Value on PIO21 pin: 0 = Logic low 1 = Logic high	Value on PIO20 pin: 0 = Logic low 1 = Logic high	Value on PIO19 pin: 0 = Logic low 1 = Logic high	Value on PIO18 pin: 0 = Logic low 1 = Logic high	Value on PIO17 pin: 0 = Logic low 1 = Logic high	Value on PIO16 pin: 0 = Logic low 1 = Logic high
PCIDV1 ABh			**PIO Pin Current State Register 4**				**Default = 00h**
Value on PIO31 pin: 0 = Logic low 1 = Logic high	Value on PIO30 pin: 0 = Logic low 1 = Logic high	Value on PIO29 pin: 0 = Logic low 1 = Logic high	Value on PIO28 pin: 0 = Logic low 1 = Logic high	Value on PIO27 pin: 0 = Logic low 1 = Logic high	Value on PIO26 pin: 0 = Logic low 1 = Logic high	Value on PIO25 pin: 0 = Logic low 1 = Logic high	Value on PIO24 pin: 0 = Logic low 1 = Logic high
PCIDV1 ACh-ADh			**Reserved**				**Default = 00h**

Table B-5 PCIDV1 00h-FFh (cont.)

7	6	5	4	3	2	1	0
PCIDV1 AEh			**DBE# Select Register 1**				**Default = 01h**
Reserved	DBEX# selection: 000 = Disable (Default) 001 = DBE0#: Cable 0, Drives 0 and 1 010 = DBE0-0#: Cable 0, Drive 0 011 = DBE0-1#: Cable 0, Drive 1 100 = Decode all IDE accesses 101 = DBE1#: Cable 1, Drives 0 and 1 110 = DBE1-0#: Cable 1, Drive 0 111 = DBE1-1#: Cable 1, Drive 1			Reserved	DBEW# selection: 000 = Disable 001 = DBE0#: Cable 0, Drives 0 and 1(Default) 010 = DBE0-0#: Cable 0, Drive 0 011 = DBE0-1#: Cable 0, Drive 1 100 = Decode all IDE accesses 101 = DBE1#: Cable 1, Drives 0 and 1 110 = DBE1-0#: Cable 1, Drive 0 111 = DBE1-1#: Cable 1, Drive 1		
PCIDV1 AFh			**DBE# Select Register 2**				**Default = 00h**
Reserved	DBEZ# selection: 000 = Disable (Default) 001 = DBE0#: Cable 0, Drives 0 and 1 010 = DBE0-0#: Cable 0, Drive 0 011 = DBE0-1#: Cable 0, Drive 1 100 = Decode all IDE accesses 101 = DBE1#: Cable 1, Drives 0 and 1 110 = DBE1-0#: Cable 1, Drive 0 111 = DBE1-1#: Cable 1, Drive 1			Reserved	DBEY# selection: 000 = Disable (Default) 001 = DBE0#: Cable 0, Drives 0 and 1 010 = DBE0-0#: Cable 0, Drive 0 011 = DBE0-1#: Cable 0, Drive 1 100 = Decode all IDE accesses 101 = DBE1#: Cable 1, Drives 0 and 1 110 = DBE1-0#: Cable 1, Drive 0 111 = DBE1-1#: Cable 1, Drive 1		
PCIDV1 B0h			**IRQA Interrupt Selection Register**				**Default = 03h**
Engage pull-down on IRQA? 0 = No 1 = Yes	Reserved		Interrupt source: 0 = ISA (edge) 1 = PCI (level)	Interrupt selection on IRQA pin (Default = IRQ3): 0000 = Disable0110 = IRQ61011 = IRQ11 0001 = IRQ10111 = IRQ71100 = IRQ12 0010 = Rsvd1000 = IRQ8#1101 = Rsvd 0011 = IRQ31001 = IRQ91110 = IRQ14 0100 = IRQ41010 = IRQ101111 = IRQ15 0101 = IRQ5			
PCIDV1 B1h			**IRQB Interrupt Selection Register**				**Default = 04h**
Engage pull-down on IRQB? 0 = No 1 = Yes	Reserved		Interrupt source: 0 = ISA (edge) 1 = PCI (level)	Interrupt selection on IRQB pin (Default = IRQ4): 0000 = Disable0110 = IRQ61011 = IRQ11 0001 = IRQ10111 = IRQ71100 = IRQ12 0010 = Rsvd1000 = IRQ8#1101 = Rsvd 0011 = IRQ31001 = IRQ91110 = IRQ14 0100 = IRQ41010 = IRQ101111 = IRQ15 0101 = IRQ5			
PCIDV1 B2h			**IRQC Interrupt Selection Register**				**Default = 05h**
Engage pull-down on IRQC? 0 = No 1 = Yes	Reserved		Interrupt source: 0 = ISA (edge) 1 = PCI (level)	Interrupt selection on IRQC pin (Default = IRQ5): 0000 = Disable0110 = IRQ61011 = IRQ11 0001 = IRQ10111 = IRQ71100 = IRQ12 0010 = Rsvd1000 = IRQ8#1101 = Rsvd 0011 = IRQ31001 = IRQ91110 = IRQ14 0100 = IRQ41010 = IRQ101111 = IRQ15 0101 = IRQ5			

Table B-5 PCIDV1 00h-FFh (cont.)

7	6	5	4	3	2	1	0
PCIDV1 B3h			**IRQD Interrupt Selection Register**				**Default = 06h**
Engage pull-down on IRQD? 0 = No 1 = Yes	Reserved		Interrupt source: 0 = ISA (edge) 1 = PCI (level)	Interrupt selection on IRQD pin (Default = IRQ6): 0000 = Disable0110 = IRQ61011 = IRQ11 0001 = IRQ10111 = IRQ71100 = IRQ12 0010 = Rsvd1000 = IRQ8#1101 = Rsvd 0011 = IRQ31001 = IRQ91110 = IRQ14 0100 = IRQ41010 = IRQ101111 = IRQ15 0101 = IRQ5			
PCIDV1 B4h			**IRQE Interrupt Selection Register**				**Default = 07h**
Engage pull-down on IRQE? 0 = No 1 = Yes	Reserved		Interrupt source: 0 = ISA (edge) 1 = PCI (level)	Interrupt selection on IRQE pin (Default = IRQ7): 0000 = Disable0110 = IRQ61011 = IRQ11 0001 = IRQ10111 = IRQ71100 = IRQ12 0010 = Rsvd1000 = IRQ8#1101 = Rsvd 0011 = IRQ31001 = IRQ91110 = IRQ14 0100 = IRQ41010 = IRQ101111 = IRQ15 0101 = IRQ5			
PCIDV1 B5h			**IRQF Interrupt Selection Register**				**Default = 09h**
Engage pull-down on IRQF? 0 = No 1 = Yes	Reserved		Interrupt source: 0 = ISA (edge) 1 = PCI (level)	Interrupt selection on IRQF pin (Default = IRQ9): 0000 = Disable0110 = IRQ61011 = IRQ11 0001 = IRQ10111 = IRQ71100 = IRQ12 0010 = Rsvd1000 = IRQ8#1101 = Rsvd 0011 = IRQ31001 = IRQ91110 = IRQ14 0100 = IRQ41010 = IRQ101111 = IRQ15 0101 = IRQ5			
PCIDV1 B6h			**IRQG Interrupt Selection Register**				**Default = 0Ah**
Engage pull-down on IRQG? 0 = No 1 = Yes	Reserved		Interrupt source: 0 = ISA (edge) 1 = PCI (level)	Interrupt selection on IRQG pin (Default = IRQ10): 0000 = Disable0110 = IRQ61011 = IRQ11 0001 = IRQ10111 = IRQ71100 = IRQ12 0010 = Rsvd1000 = IRQ8#1101 = Rsvd 0011 = IRQ31001 = IRQ91110 = IRQ14 0100 = IRQ41010 = IRQ101111 = IRQ15 0101 = IRQ5			
PCIDV1 B7h			**IRQH Interrupt Selection Register**				**Default = 0Bh**
Engage pull-down on IRQH? 0 = No 1 = Yes	Reserved		Interrupt source: 0 = ISA (edge) 1 = PCI (level)	Interrupt selection on IRQH pin (Default = IRQ11): 0000 = Disable0110 = IRQ61011 = IRQ11 0001 = IRQ10111 = IRQ71100 = IRQ12 0010 = Rsvd1000 = IRQ8#1101 = Rsvd 0011 = IRQ31001 = IRQ91110 = IRQ14 0100 = IRQ41010 = IRQ101111 = IRQ15 0101 = IRQ5			

Table B-5 PCIDV1 00h-FFh (cont.)

7	6	5	4	3	2	1	0
PCIDV1 B8h			**PCI Interrupt Selection Register 1**				**Default = 00h**
Interrupt selection on PIO PCIRQ1# input (Default = Disable): 0000 = Disable0110 = IRQ61011 = IRQ11 0001 = IRQ10111 = IRQ71100 = IRQ12 0010 = Rsvd1000 = IRQ8#1101 = Rsvd 0011 = IRQ31001 = IRQ91110 = IRQ14 0100 = IRQ41010 = IRQ101111 = IRQ15 0101 = IRQ5				Interrupt selection on PIO PCIRQ0# input (Default = Disable): 0000 = Disable0110 = IRQ61011 = IRQ11 0001 = IRQ10111 = IRQ71100 = IRQ12 0010 = Rsvd1000 = IRQ8#1101 = Rsvd 0011 = IRQ31001 = IRQ91110 = IRQ14 0100 = IRQ41010 = IRQ101111 = IRQ15 0101 = IRQ5			
PCIDV1 B9h			**PCI Interrupt Selection Register 2**				**Default = 00h**
Interrupt selection on PIO PCIRQ3# input (Default = Disable): 0000 = Disable0110 = IRQ61011 = IRQ11 0001 = IRQ10111 = IRQ71100 = IRQ12 0010 = Rsvd1000 = IRQ8#1101 = Rsvd 0011 = IRQ31001 = IRQ91110 = IRQ14 0100 = IRQ41010 = IRQ101111 = IRQ15 0101 = IRQ5				Interrupt selection on PIO PCIRQ2# input (Default = Disable): 0000 = Disable0110 = IRQ61011 = IRQ11 0001 = IRQ10111 = IRQ71100 = IRQ12 0010 = Rsvd1000 = IRQ8#1101 = Rsvd 0011 = IRQ31001 = IRQ91110 = IRQ14 0100 = IRQ41010 = IRQ101111 = IRQ15 0101 = IRQ5			
PCIDV1 BAh			**Serial IRQ Control Register 1**				**Default = 00h**
Compaq SIRQ HALT mode request: 0 = Active 1 = Halt	Compaq SIRQ QUIET mode request: 0 = Continuous 1 = Quiet	SIRQ delays ISR accesses: 0 = No 1 = Yes	Compaq SIRQ data frame slots. Change only when the serial IRQ logic is disabled or in HALT state: 0 = 17 slots 1 = 21 slots	Compaq SIRQ - Start frame width in PCI clocks. Change this setting only when serial IRQ is disabled or in HALT state: 00 = 4 PCICLKs 01 = 6 PCICLKs 10 = 8 PCICLKs 11 = Reserved		SIRQ delays EOI accesses: 0 = No 1 = Yes	Compaq SIRQ (Compaq serial IRQ scheme): 0 = Disable 1 = Enable
PCIDV1 BBh			**Serial IRQ Control Register 2**				**Default = 00h**
Compaq SIRQ in HALT state (RO): 0 = No 1 = Yes	Compaq SIRQ in QUIET state (RO): 0 = No 1 = Yes	Reserved				SIRQ delays IRR accesses: 0 = No 1 = Yes	Intel SIRQ (Intel serial IRQ scheme): 0 = Disable 1 = Enable
PCIDV1 BCh			**Extended mode (with 602A) Register 1**				**Default = 04h**
Reserved		EDACKEN# polarity: 0 = Active low 1 =Active high	Share NOWS# input with DCS3# output: 0 = No 1 = Yes	Share IOCHCK# with SERR#: 0 = No 1 = Yes (input qualified by port 061h bit)	Pin AE18 function: 0 = IRQSER 1 = DDRQ1 (default)	Extended mode pin J22 usage: 0 = EPMMUX0 (I) 1 = EDAKEN (O)	DACK0-7# Extended mode 0 = Disable 1 = Enable
PCIDV1 BDh			**Extended mode (with 602A) Register 2**				**Default = 00h**
EPMMUX3 C3 input: 0 = DRQ7 1 = ACPI11	EPMMUX3 C2 input: 0 = DRQ6 1 = ACPI10	EPMMUX3 C1 input: 0 = DRQ5 1 = ACPI9	EPMMUX1 C0 input: 0 = IRQ8# 1 = ACPI8	EPMMUX2 C3 input: 0 = DRQ3 1 = ACPI7	EPMMUX2 C2 input: 0 = DRQ2 1 = ACPI6	EPMMUX2 C1 input: 0 = DRQ1 1 = ACPI5	EPMMUX2 C0 input: 0 = DRQ0 1 = ACPI4

Table B-5 PCIDV1 00h-FFh (cont.)

7	6	5	4	3	2	1	0
PCIDV1 BEh-BFh			**Reserved**				**Default = 00h**
PCIDV1 C0h			**DMA Channels A and B Selection Register**				**Default = 10h**
Reserved	DMA channel selection on DRQB/DACKB# pins (Channel 1): 000 = Channel 0100 = PPWR5 001 = Channel 1101 = Channel 5 010 = Channel 2110 = Channel 6 011 = Channel 3111 = Channel 7			Reserved	DMA channel selection on DRQA/DACKA# pins (Default = Channel 0): 000 = Channel 0100 = PPWR4 001 = Channel 1101 = Channel 5 010 = Channel 2110 = Channel 6 011 = Channel 3111 = Channel 7		
PCIDV1 C1h			**DMA Channels C and D Selection Register**				**Default = 32h**
Reserved	DMA channel selection on DRQD/DACKD# pins (Channel 3): 000 = Channel 0100 = PPWR7 001 = Channel 1101 = Channel 5 010 = Channel 2110 = Channel 6 011 = Channel 3111 = Channel 7			Reserved	DMA channel selection on DRQC/DACKC# pins (Channel 2): 000 = Channel 0100 = PPWR6 001 = Channel 1101 = Channel 5 010 = Channel 2110 = Channel 6 011 = Channel 3111 = Channel 7		
PCIDV1 C2h			**DMA Channel E Selection Register**				**Default = 50h**
Reserved	DMA channel selection on DRQE/DACKE# pins (Default = Channel 5): 000 = Channel 0100 = PPWR13 001 = Channel 1101 = Channel 5 010 = Channel 2110 = Channel 6 011 = Channel 3111 = Channel 7			Reserved	Function selection on TC pin: 0 = TC 1 = PPWR10	Function selection on AEN pin: 0 = AEN 1 = PPWR11	Function selection on RFSH# pin: 0 = RFSH# 1 = PPWR12
PCIDV1 C3h			**DMA Channels F and G Selection Register**				**Default = 76h**
Reserved	DMA channel selection on DRQG/DACKG# pins (Default = Channel 7): 000 = Channel 0100 = PPWR15 001 = Channel 1101 = Channel 5 010 = Channel 2110 = Channel 6 011 = Channel 3111 = Channel 7			Reserved	DMA channel selection on DRQF/DACKF# pins (Default = Channel 6): 000 = Channel 0100 = PPWR14 001 = Channel 1101 = Channel 5 010 = Channel 2110 = Channel 6 011 = Channel 3111 = Channel 7		
PCIDV1 C4h-CFh			**Reserved**				**Default = 00h**
Note: PCIDV1 D0h through EEh pertain only to FS ACPI Version. Otherwise they are reserved.							
PCIDV1 D0h			**PM1_BLK Base Address Register - Byte 0: Address Bits [7:0]**				**Default = 00h**
PM1 Block Base Address Bits - Address value A[15:0] defines the 16-bit starting address for PM1_BLK Register Set in system I/O space. The address is required to be paragraph-aligned (on a 16-byte boundary), so bits [3:0] are always 0.							PM1_BLK Register Set: 0 = Disable 1 = Enable
PCIDV1 D1h			**PM1_BLK Base Address Register - Byte 1: Address Bits [15:8]**				**Default = 00h**

Table B-5 PCIDV1 00h-FFh (cont.)

7	6	5	4	3	2	1	0
PCIDV1 D2h		**PM2_BLK Base Address Register - Byte 0: Address Bits [7:0]**					**Default = 00h**
PM2 Block Base Address Bits - Address value A[15:0] defines the 16-bit starting address for PM2_BLK Register Set in system I/O space. The address is required to be qword-aligned (on an 8-byte boundary), so bits [2:0] are always 0.							PM2_BLK Register Set: 0 = Disable 1 = Enable
PCIDV1 D3h		**PM2_BLK Base Address Register -Byte 1: Address Bits [15:8]**					**Default = 00h**
PCIDV1 D4h		**P_BLK Base Address Register - Byte 0: Address Bits [7:0]**					**Default = 00h**
Processor Block Base Address Bits - Address value A[15:0] defines the 16-bit starting address for P_BLK Register Set in system I/O space. The address is required to be qword-aligned (on an 8-byte boundary), so bits [2:0] are always 0.							P_BLK Register Set: 0 = Disable 1 = Enable
PCIDV1 D5h		**P_BLK Base Address Register - Byte 1: Address Bits [15:8]**					**Default = 00h**
PCIDV1 D6h		**GPE0_BLK Base Address Register - Byte 0: Address Bits [7:0]**					**Default = 00h**
General Purpose Event Block Base Address Bits - Address value A[15:0] defines the 16-bit starting address for GPE0_BLK Register Set in system I/O space. The address is required to be qword-aligned (on an 8-byte boundary), so bits [2:0] are always 0.							GPE0_BLK Register Set: 0 = Disable 1 = Enable
PCIDV1 D7h		**GPE0_BLK Base Address Register - Byte 0: Address Bits [15:8]**					**Default = 00h**
PCIDV1 D8h			**ACPI Source Control Register - Byte 0**				**Default = 00h**
ACPI7 LID: 0 = IRQ Driveback 1 = Discrete ACPI input	ACPI6 EC#: 0 = IRQ Driveback 1 = Discrete ACPI input	ACPI5 USB#: 0 = IRQ Driveback 1 = Discrete ACPI input	ACPI4 RI#: 0 = IRQ Driveback 1 = Discrete ACPI input	ACPI3 FRI#: 0 = IRQ Driveback 1 = Discrete ACPI input	ACPI2 STSCHG#: 0 = IRQ Driveback 1 = Discrete ACPI input	ACPI1 DOCK#: 0 = IRQ Driveback 1 = Discrete ACPI input	ACPI0 UNDOCK#: 0 = IRQ Driveback 1 = Discrete ACPI input
PCIDV1 D9h			**ACPI Source Control Register - Byte 1**				**Default = 00h**
Reserved				ACPI11: 0 = IRQ Driveback 1 = Discrete ACPI input	ACPI10: 0 = IRQ Driveback 1 = Discrete ACPI input	ACPI9: 0 = IRQ Driveback 1 = Discrete ACPI input	ACPI8: 0 = IRQ Driveback 1 = Discrete ACPI input
The bits in the ACPI Source Control Register (Bytes 0 and 1) select whether the specified ACPI input comes from the IRQ Driveback cycle or from an external pin source (one of the PIO pins or through ACPIMX option).							
PCIDV1 DAh			**ACPI Source Status Register - Byte 0**				**Default = 00h**
ACPI7 LID: 0 = Low 1 = High	ACPI6 EC#: 0 = Low 1 = High	ACPI5 USB#: 0 = Low 1 = High	ACPI4 RI#: 0 = Low 1 = High	ACPI3 FRI#: 0 = Low 1 = High	ACPI2 STSCHG#: 0 = Low 1 = High	ACPI1 DOCK#: 0 = Low 1 = High	ACPI0 UNDOCK#: 0 = Low 1 = High

Table B-5 PCIDV1 00h-FFh (cont.)

7	6	5	4	3	2	1	0
PCIDV1 DBh			**ACPI Source Status Register - Byte 1**				**Default = 00h**
Reserved				ACPI11: 0 = Low 1 = High	ACPI10: 0 = Low 1 = High	ACPI9: 0 = Low 1 = High	ACPI8: 0 = Low 1 = High
The bits in the ACPI Source Status Register (Bytes 0 and 1) indicate the current state of the ACPI lines, either the discrete pins or the last IRQ Driveback value depending on the ACPI Source Control Register setting. This information may also be available elsewhere, since the IRQ Driveback values and PIO pin values can be read from other registers. However, this register provides a central means of reading signal state and is especially useful for signals such as LID (which generates an SCI, System Controller Interrupt, on both opening and closing events).							
PCIDV1 DCh			**ACPI Event Resume Control Register - Byte 0**				**Default = 00h**
ACPI7 LID: 0 = Event will not cause Resume 1 = Event will cause Resume operation if system is in Suspend	ACPI6 EC#: 0 = Event will not cause Resume 1 = Event will cause Resume operation if system is in Suspend	ACPI5 USB#: 0 = Event will not cause Resume 1 = Event will cause Resume operation if system is in Suspend	ACPI4 RI#: 0 = Event will not cause Resume 1 = Event will cause Resume operation if system is in Suspend	ACPI3 FRI#: 0 = Event will not cause Resume 1 = Event will cause Resume operation if system is in Suspend	ACPI2 STSCHG#: 0 = Event will not cause Resume 1 = Event will cause Resume operation if system is in Suspend	ACPI1 DOCK#: 0 = Event will not cause Resume 1 = Event will cause Resume operation if system is in Suspend	ACPI0 UNDOCK#: 0 = Event will not cause Resume 1 = Event will cause Resume operation if system is in Suspend
PCIDV1 DDh -			**ACPI Event Resume Control Register - Byte 1**				**Default = 00h**
Reserved				ACPI11: 0 = Event will not cause Resume 1 = Event will cause Resume operation if system is in Suspend	ACPI10: 0 = Event will not cause Resume 1 = Event will cause Resume operation if system is in Suspend	ACPI9: 0 = Event will not cause Resume 1 = Event will cause Resume operation if system is in Suspend	ACPI8: 0 = Event will not cause Resume 1 = Event will cause Resume operation if system is in Suspend
The bits in the ACPI Event Resume Control Register (Bytes 0 and 1) select whether the specified ACPI input can wake the system from its Suspend mode. Note that any PCI device that sends its information via the IRQ Driveback cycle will wake the system when it activates its CLKRUN# pin.							
PCIDV1 DEh-DFh			**Reserved**				**Default = 00h**

Table B-5 PCIDV1 00h-FFh (cont.)

7	6	5	4	3	2	1	0
PCIDV1 E0h			**SLP_TYP Control Register - Byte 0**				**Default = 00h**
PLVL17: Selects state PPWR17 line will assume when SCTL_ PPWR17 setting is reached. 0 = Low 1 = High	SCTL_PPWR17: Refer to bits [2:0] for decode.			PLVL16: Selects state PPWR16 line will assume when SCTL_ PPWR16 setting is reached. 0 = Low 1 = High	SCTL_PPWR16: 000 = PPWRx switches when SLP_TYP (PM1_BLK Offset 05h[4:2) is set for ACPI S0 system state 001 = PPWRx switches when SLP_TYP (PM1_BLK Offset 05h[4:2) is set for ACPI S0 or S1 system state 010 = PPWRx switches when SLP_TYP (PM1_BLK Offset 05h[4:2) is set for ACPI S0, S1, or S2 system state 011 = PPWRx switches when SLP_TYP (PM1_BLK Offset 05h[4:2) is set for ACPI S0, S1, S2, or S3 system state 100 = PPWRx switches when SLP_TYP (PM1_BLK Offset 05h[4:2) is set for ACPI S0, S1, S2, S3, or S4 system state		
PCIDV1 E1h			**SLP_TYP Control Register - Byte 1**				**Default = 00h**
PLVL19: Selects state PPWR19 line will assume when SCTL_ PPWR19 setting is reached. 0 = Low 1 = High	SCTL_PPWR19: Refer to PCIDV1 E0h[2:0] for decode.			PLVL18: Selects state PPWR18 line will assume when SCTL_ PPWR18 setting is reached. 0 = Low 1 = High	SCTL_PPWR18: Refer to PCIDV1 E0h[2:0] for decode.		
PCIDV1 E2h -			**SLP_TYP Control Register - Byte 2**				**Default = 00h**
PLVL21: Selects state PPWR21 line will assume when SCTL_ PPWR21 setting is reached. 0 = Low 1 = High	SCTL_PPWR21: Refer to PCIDV1 E0h[2:0] for decode.			PLVL20: Selects state PPWR20 line will assume when SCTL_ PPWR20 setting is reached. 0 = Low 1 = High	SCTL_PPWR20: Refer to PCIDV1 E0h[2:0] for decode.		
PCIDV1 E3h			**SLP_TYP Control Register - Byte 3**				**Default = 00h**
PLVL23: Selects state PPWR23 line will assume when SCTL_ PPWR23 setting is reached. 0 = Low 1 = High	SCTL_PPWR23: Refer to PCIDV1 E0h[2:0] for decode.			PLVL22: Selects state PPWR22 line will assume when SCTL_ PPWR22 setting is reached. 0 = Low 1 = High	SCTL_PPWR22: Refer to PCIDV1 E0h[2:0] for decode.		

Table B-5 PCIDV1 00h-FFh (cont.)

7	6	5	4	3	2	1	0
PCIDV1 E4h			**SLP_TYP Control Register - Byte 4**				**Default = 00h**
PLVL25: Selects state PPWR25 line will assume when SCTL_ PPWR25 setting is reached. 0 = Low 1 = High	SCTL_PPWR25: Refer to PCIDV1 E0h[2:0] for decode.			PLVL24: Selects state PPWR24 line will assume when SCTL_ PPWR24 setting is reached. 0 = Low 1 = High	SCTL_PPWR24: Refer to PCIDV1 E0h[2:0] for decode.		
PCIDV1 E5h			**SLP_TYP Control Register - Byte 5**				**Default = 00h**
PLVL27: Selects state PPWR27 line will assume when SCTL_ PPWR27 setting is reached. 0 = Low 1 = High	SCTL_PPWR27: Refer to PCIDV1 E0h[2:0] for decode.			PLVL26: Selects state PPWR26 line will assume when SCTL_ PPWR26 setting is reached. 0 = Low 1 = High	SCTL_PPWR26: Refer to PCIDV1 E0h[2:0] for decode.		
PCIDV1 E6h			**SLP_TYP Control Register - Byte 6**				**Default = 00h**
PLVL29: Selects state PPWR29 line will assume when SCTL_ PPWR29 setting is reached. 0 = Low 1 = High	SCTL_PPWR29: Refer to PCIDV1 E0h[2:0] for decode.			PLVL28: Selects state PPWR28 line will assume when SCTL_ PPWR28 setting is reached. 0 = Low 1 = High	SCTL_PPWR28: Refer to PCIDV1 E0h[2:0] for decode.		
PCIDV1 E7h			**SLP_TYP Control Register - Byte 7**				**Default = 00h**
PLVL31: Selects state PPWR31 line will assume when SCTL_ PPWR31 setting is reached. 0 = Low 1 = High	SCTL_PPWR31: Refer to PCIDV1 E0h[2:0] for decode.			PLVL30: Selects state PPWR30 line will assume when SCTL_ PPWR30 setting is reached. 0 = Low 1 = High	SCTL_PPWR30: Refer to PCIDV1 E0h[2:0] for decode.		
PCIDV1 E8h			**Power Control Latch Set Register**				**Default = 00h**
Control line setting: 0 = Low 1 = High	Reserved		PPWR control line to be set: 00000 = PPWR0... 00001 = PPWR111110 = PPWR30 ...11111 = PPWR31				
PCIDV1 E9h			**Reserved**				**Default = 00h**

Table B-5 PCIDV1 00h-FFh (cont.)

7	6	5	4	3	2	1	0
PCIDV1 EAh			**Power Control Readback Register - Byte 0**				**Default = FFh**
PPWR7 state: 0 = Low 1 = High	PPWR6 state: 0 = Low 1 = High	PPWR5 state: 0 = Low 1 = High	PPWR4 state: 0 = Low 1 = High	PPWR3 state: 0 = Low 1 = High	PPWR2 state: 0 = Low 1 = High	PPWR1 state: 0 = Low 1 = High	PPWR0 state: 0 = Low 1 = High
PCIDV1 EBh			**Power Control Readback Register - Byte 1**				**Default = FFh**
PPWR15 state: 0 = Low 1 = High	PPWR14 state: 0 = Low 1 = High	PPWR13 state: 0 = Low 1 = High	PPWR12 state: 0 = Low 1 = High	PPWR11 state: 0 = Low 1 = High	PPWR10 state: 0 = Low 1 = High	PPWR9 state: 0 = Low 1 = High	PPWR8 state: 0 = Low 1 = High
PCIDV1 ECh			**Power Control Readback Register - Byte 2**				**Default = F0h**
PPWR23 state: 0 = Low 1 = High	PPWR22 state: 0 = Low 1 = High	PPWR21 state: 0 = Low 1 = High	PPWR20 state: 0 = Low 1 = High	PPWR19 state: 0 = Low 1 = High	PPWR18 state: 0 = Low 1 = High	PPWR17 state: 0 = Low 1 = High	PPWR16 state: 0 = Low 1 = High
PCIDV1 EDh			**Power Control Readback Register - Byte 3**				**Default = F0h**
PPWR31 state: 0 = Low 1 = High	PPWR30 state: 0 = Low 1 = High	PPWR29 state: 0 = Low 1 = High	PPWR28 state: 0 = Low 1 = High	PPWR27 state: 0 = Low 1 = High	PPWR26 state: 0 = Low 1 = High	PPWR25 state: 0 = Low 1 = High	PPWR24 state: 0 = Low 1 = High
PCIDV1 EEh			**ACPI Thermal Control Register**				**Default = 00h**
Reserved		PIO pin FAN control is auto-toggled high: 00 = Never 01 = During Level 1 and 2 STPCLK# modulation 10 = During Level 2 STPCLK# modulation only 11 = Reserved		Temperature event granularity: Selects the bit of the THFREQ value in SYSCFG F3h-F4h that will be monitored such that it generates a thermal management event when it toggles. 0000 = Bit 00 100 = Bit 41 000 = Bit 81 100 = Bit 12 0001 = Bit 10 101 = Bit 51 001 = Bit 91 101 = Bit 13 0010 = Bit 20 110 = Bit 61 010 = Bit 101 110 = Bit 14 0011 = Bit 30 111 = Bit 71 011 = Bit 111 111 = Bit 15			
PCIDV1 EFh-FDh			**Reserved**				**Default = 00h**
PCIDV1 FEh			**Stop Grant Cycle Generation Register (WO)**				**Default = 00h**
Reserved for debug purposes.							
PCIDV1 FFh			**Parity Error Cycle Generation Register**				**Default = 00h**
Reserved for debug purposes.							

Appendix C. AC Characteristics

C.1 CPU Interface Module AC Characteristics (66MHz - Preliminary)

Symbol	Parameter	Min	Max	Unit	Condition
t400	BOFF# valid delay from CPUCLKIN	5	12	ns	
t401	HITM# setup time to CPUCLKIN	2		ns	
t402	HITM# hold time to CPUCLKIN	1		ns	
t406	INV valid delay from CPUCLKIN on (W/R#)/INV signal	5	11	ns	
t407	WB/WT# valid delay from CPUCLKIN on EADS#/(WB/WT#) signal	5	11	ns	
t201	CPUCLKIN to BRDY# active delay	5	11	ns	
t202	CPUCLKIN to BRDY# inactive delay	5	11	ns	
t205	CDOE# falling edge valid delay from CPUCLKIN rising	5	11	ns	
t207	ADS# setup to CPUCLKIN high	2		ns	
t208	ADS# hold time from CPUCLKIN high	1		ns	
t209	M/IO#, D/C#, W/R#, CACHE# setup to CPUCLKIN high	1		ns	Sampled one CPUCLKIN after ADS#
t408	M/IO#, D/C#, W/R#, CACHE# hold to CPUCLKIN high	1		ns	Sampled one CPUCLKIN after ADS#
t212	CPUCLKIN to TAGWE# active delay	5	13	ns	
t213	CPUCLKIN to TAGWE# inactive delay	5	13	ns	
t214	CACS# falling edge valid delay from CPUCLKIN high	5	11	ns	
t215	BWE#, GWE# falling edge valid delay from CPUCLKIN high	5	11	ns	
t216	CPUCLKIN to NA# active delay	5	11	ns	
t217	CPUCLKIN to NA# inactive delay	5	11	ns	
t218	TAG[7:0] data read to BRDY# low		5	ns	
t219	CPUCLKIN to ADSC# active delay	5	11	ns	
t220	CPUCLKIN to ADV# active delay	5	11	ns	
t223	HA[31:3] valid delay from PCICLK high	2	18	ns	
t224	HA[31:3] Float delay from PCICLK high	2	18	ns	
t225	AHOLD valid delay from CPUCLKIN high	5	13	ns	
t226	EADS# valid delay from CPUCLKIN high	5	11	ns	
t227	RESET rising edge valid from CPUCLKIN high	5	12	ns	
t228	RESET falling edge valid delay from CPUCLKIN high	5	12	ns	
t229	KEN# valid delay from CPUCLKIN high	5	11	ns	
t413	NMI valid delay from PCICLK	2	15	ns	
t414	RESET setup time to PCICLK	5		ns	

C.1 CPU Interface Module AC Characteristics (66MHz - Preliminary) (cont.)

Symbol	Parameter	Min	Max	Unit	Condition
t415	RESET hold time to PCICLK	3		ns	
t313	INIT valid delay from PCICLK rising	2	15	ns	
t315	SMI# valid delay from PCICLK rising	2	15	ns	

Note: BE[7:0]#, LOCK#, SMIACT#, and A[31:0] are not sampled with respect to CPUCLK. These inputs directly feed combinatorial inputs.

C.2 DRAM Controller Module AC Characteristics (66MHz - Preliminary)

Symbol	Parameter	Min	Max	Unit	Condition
t230	RAS[3:0]# valid delay from CPUCLK high/PCICLK high	2	15	ns	
t231	CAS[7:0]# valid delay from CPUCLK high/PCICLK high	2	15	ns	
t232	MA[13:0] valid delay from CPUCLK high/PCICLK high	2	15	ns	
t233	DWE# valid delay from CPUCLK high/PCICLK high	2	15	ns	
t234	MA[13:0] propagation delay from HA[28:3]	2	22	ns	

C.3 PCI Controller Module AC Characteristics (66MHz - Preliminary)

Symbol	Parameter	Min	Max	Unit	Condition
t235	C/BE[3:0]#, FRAME#, TRDY#, IRDY#, STOP#, PLOCK#, DEVSEL# valid delay from PCICLK rising	2	11	ns	
t236	C/BE[3:0]#, FRAME#, TRDY#, IRDY#, STOP#, PLOCK#, DEVSEL# active to float delay from PCICLK rising	2	15	ns	
t237	C/BE[3:0]#, FRAME#, TRDY#, IRDY#, STOP#, DEVSEL# setup time to PCICLK rising	7		ns	
t238	C/BE[3:0]#, FRAME#, TRDY#, IRDY#, STOP#, DEVSEL# hold time from PCICLK rising	0		ns	
t239	AD[31:0] valid delay from PCICLK high	2	11	ns	
t240	AD[31:0] setup time to PCICLK high	7		ns	
t241	AD[31:0] hold time from PCICLK high	0		ns	
t301	FRAME#, TRDY#, IRDY#, STOP#, DEVSEL#, PAR, SERR#, PERR# valid delay from PCICLK rising	2	11	ns	
t302	GNT[2:0]# valid delay from PCICLK rising	2	12	ns	
t303	PCIRQ[3:0]# valid delay from PCICLK rising	2	16	ns	
t305	FRAME#, TRDY#, IRDY#, STOP#, DEVSEL#, PAR, SERR#, PERR# float delay from PCICLK rising	2	20	ns	
t306	C/BE[3:0]#, AD[31:0], FRAME#, IRDY#, TRDY#, STOP#, DEVSEL#, PLOCK#, PAR, SERR#, PERR# setup time to PCICLK rising	7		ns	
t307	C/BE[3:0]#, AD[31:0], FRAME#, IRDY#, TRDY#, STOP#, DEVSEL#, PLOCK#, PAR, SERR#, PERR# hold time from PCICLK rising	0		ns	
t308	PREQ[2:0]# setup time to PCICLK rising	12		ns	
t309	PREQ[2:0]# hold time from PCICLK rising	0		ns	
t310	PCIRQ[3:0]# setup time to PCICLK rising	5		ns	
t311	PCIRQ[3:0]# hold time from PCICLK rising	3		ns	

C.4 ISA Controller Module AC Characteristics (66MHz - Preliminary)

Symbol	Parameter	Min	Max	Unit	Condition
t314	ATCLK rising edge delay from PCICLK rising edge	5	20	ns	
t416	A20M# valid delay from ATCLK	2	15	ns	
t316	IOR#, IOW# high valid delay from ATCLK rising		15	ns	
t317	MRD#, MWR#, SMRD#, SMWR# valid delay from ATCLK rising		15	ns	
t318	BALE low valid delay from ATCLK rising		15	ns	
t320	STPCLK# valid delay from ATCLK rising		15	ns	
t321	RTCAS, RTCRD#, RTCWR#, ROMCS#/KBDCS# valid delay from ATCLK rising		15	ns	
t322	BALE high valid delay from ATCLK falling		15	ns	
t323	IOR#, IOW#, MRD#, MWR#, SMRD#, SMWR# low valid delay from ATCLK falling		15	ns	
t324	PPWR0# valid delay from ATCLK falling		15	ns	
t325	NOWS# setup time to ATCLK falling	0		ns	
t326	NOWS# hold time from ATCLK falling	5		ns	
t327	IOCHRDY setup time to ATCLK falling	5		ns	
t328	IOCHRDY hold time from ATCLK falling	5		ns	

Note: FERR# from the CPU is not sampled with respect to any clock. The input directly feeds combinatorial circuits.